Control Strategy for Energy Efficient Fluid Power Actuators

Utilizing Individual Metering

Linköping Studies in Science and Technology
Thesis No. 1341

Control Strategy for Energy Efficient Fluid Power Actuators

Utilizing Individual Metering

Björn Eriksson

Linköpings universitet
INSTITUTE OF TECHNOLOGY

LIU-TEK-LIC-2007:50
Division of Fluid and Mechanical Engineering Systems
Department of Management and Engineering
Linköping University
SE–581 83 Linköping, Sweden

Linköping 2007

ISBN 978-91-85895-06-9 ISSN 0280-7971
LIU-TEK-LIC-2007:50

Copyright © 2007 by Björn Eriksson
Department of Management and Engineering
Linköping University
SE-581 83 Linköping, Sweden

Printed in Sweden by LiU-Tryck, Linköping, 2007.

To

my Family

"Det gäller inte att fylla livet med år utan åren med liv."

Okänd

Abstract

THIS THESIS PRESENTS a solution enabling lower losses in hydraulic actuator systems. A mobile fluid power system often contains several different actuators supplied with a single load sensing pump. One of the main advantages is the need of only one system pump. This makes the fluid power system compact and cost-effective.

A hydraulic load often consists of two ports, e.g. motors and cylinders. Such loads have traditionally been controlled by a valve that controls these ports by one single control signal, namely the position of the spool in a control valve. In this kind of valve, the inlet (meter-in) and outlet (meter-out) orifices are mechanically connected. The mechanical connection makes the system robust and easy to control, at the same time as the system lacks flexibility. Some of the main drawbacks are

The fixed relation between the inlet and outlet orifices in most applications produce too much throttling at the outlet orifice under most operating conditions. This makes the system inefficient.

The flow directions are fixed for a given spool position; therefore, no energy recuperation and/or regeneration ability is available.

In this thesis a novel system idea enabling, for example, recuperation and regeneration is presented. Recuperation is when flow is taken from a tank, pressurized by external loads, and then fed back into the pump line. Regeneration is when either cylinder chambers (or motor ports) are connected to the pump line. Only one system pump is needed. Pressure compensated (load independent), bidirectional, poppet valves are proposed and utilized.

The novel system presented in this thesis needs only a position sensor on each compensator spool. This simple sensor is also suitable for identification of mode switches, e.g. between normal, differential and regenerative modes. Patent pending.

The balance of where to put the functionality (hardware and/or software) makes it possible to manoeuvre the system with maintained speed control in the case of sensor failure. The main reason is that the novel system does not need pressure transducers for flow determination. Some features of the novel system:

Mode switches The mode switches are accomplished without knowledge about the pressures in the system

Throttle losses With the new system approach, choice of control and measure signals, the throttle losses at the control valves are reduced

Smooth mode switches The system will switch to regenerative mode automatically in a smooth manner when possible

Use energy stored in the loads The load, e.g. a cylinder, is able to be used as a motor when possible, enabling the system to recuperate overrun loads

The system and its components are described together with the control algorithms that enable energy efficient operation.

Measurements from a real application are also presented in the thesis.

Acknowledgements

The work presented in this thesis has been carried out at the Division of Fluid and Mechanical Engineering Systems (FluMeS) at Linköping University. I would like to express my gratitude to several people.

First of all, I would like to thank my supervisor, Prof. Jan-Ove Palmberg, for his support, encouragement and for giving me this opportunity to join the division. Thanks also to Dr. Jonas Larsson, my co-supervisor for his support and help during this project. Another important person in my work has been Prof. Bo R. Andersson who I would like to thank for great discussions and collaboration.

Thank you to all the members and former members of the division! You have all made this time very exciting, especially the discussions over a cup of coffee.

I also would like to thank Parker Hannifin AB in Borås for their financial engagement in my work as well as for their help with hardware and other resources.

Finally, I most of all would like to thank my family. My mother and father, Monica and Nils, without them I had not been here today (or even ever!). Thank you to my brother, Klas, for being a part of my life. Last but not least, thank you Ulrika, my wonderful travelling companion, for sharing the journey called life with me.

Linköping in December 2007

Björn Eriksson

Papers

The following three appended papers are organized in chronological order of publication and will be referred to by their Roman numerals. All papers are printed in their originally published state with the exception of minor errata, changes in text and figure layout and changes in the language and notation in order to maintain consistency throughout the thesis.

In papers [I–III], the first author is the main author, responsible for the work presented, with additional support from other co-writers.

[I] Eriksson B., Larsson J. and Palmberg J.-O., "Study on Individual Pressure Control in Energy Efficient Cylinder Drives," in *4th FPNI-Ph.D. Symphosium, FPNI'06,* (Eds. M. Ivantysynova), pp. 77–99, Sarasota, United States, 13th–17th June, 2006.

[II] Eriksson B., Andersson B. and Palmberg J.-O., "The Dynamic Properties of a Poppet Type Hydraulic Flow Amplifier," in *10th Scandinavian International Conference on Fluid Power, SICFP´07,* (Eds. J. Vilenius and K. T. Koskinen), pp. 161–178, Tampere, Finland, 21st–23rd May, 2007.

[III] Eriksson B., Larsson J. and Palmberg J.-O., "A Novel Valve Concept Including the Valvistor Poppet Valve," in *10th Scandinavian International Conference on Fluid Power, SICFP´07,* (Eds. J. Vilenius and K. T. Koskinen), pp. 355–364, Tampere, Finland, 21st–23rd May, 2007.

Contents

1 Introduction **7**
- 1.1 Aims ... 9
- 1.2 Limitations ... 10
- 1.3 Previous research ... 10
- 1.4 Existing independent metering valves ... 11
- 1.5 Research results ... 11
- 1.6 Contribution ... 12

2 Energy efficiency in mobile hydraulic systems **13**
- 2.1 Constant pressure ... 14
- 2.2 Open centre ... 15
- 2.3 Load sensing ... 15
- 2.4 Valveless ... 16
- 2.5 System summary ... 17

3 System configuration **19**
- 3.1 Hardware layout ... 19
- 3.2 Controller scheme ... 21
- 3.3 Enhanced tank pressure ... 26
- 3.4 Example of an "over-centre" motion ... 27

4 Valves **33**
- 4.1 The Valvistor valve ... 35
  - 4.1.1 Working principle ... 35
  - 4.1.2 Bi-directional Valvistor ... 37
  - 4.1.3 Measurement on the pressure compensated Valvistor ... 38
- 4.2 Novel bi-directional compensator ... 39

5 Wheel loader application **43**
- 5.1 Calculation cases ... 44
  - 5.1.1 Case 1 ... 44
  - 5.1.2 Case 2 ... 44
  - 5.1.3 Case 3 ... 44

5.1.4 Case 4 44
5.2 Energy efficiency comparison of the different system layouts 45

6 Forwarder application – A demonstrator **47**
6.1 Hardware 47
6.2 Software 47
6.3 Measurements 48

7 Results and conclusions **51**

8 Outlook **53**

9 Review of papers **55**

References **57**

Appended papers

I Study on Individual Pressure Control in Energy Efficient Cylinder Drives **61**

II The Dynamic Properties of a Poppet Type Hydraulic Flow Amplifier **87**

III A Novel Valve Concept Including the Valvistor Poppet Valve **109**

Nomenclature

The quantities and subindexes used in this thesis are listed in tables 0.1 and 0.2.

Table 0.1 *Quantities.*

Quantity	Description	Unity
A	Area	m^2
C_q	Flow coefficient	$-$
F	Force	N
g	Flow gain	$-$
i	Current	A
p	Pressure	Pa
q	Flow	$\frac{\mathrm{m}^3}{\mathrm{s}}$
w	Area gradient	m
x	Position	m
y	Position	m
κ	Area ratio	$-$
ω_b	Break frequency	$\frac{\mathrm{rad}}{\mathrm{s}}$
ρ	Density	$\frac{\mathrm{kg}}{\mathrm{m}^3}$

Table 0.2 *Subindexes.*

Subindex	Description
A	A-side of the Valvistor or a specific cylinder chamber
B	B-side of the Valvistor or a specific cylinder chamber
$high$	High pressure, e.g. pump line
$input$	Input signal
low	Low pressure, e.g. tank
m	Main stage
new	Relates to a new system
$normal$	Relates to a conventional system
$piston$	Piston of a cylinder
ref	Reference value
rod	Rod of a cylinder
s	Slot in the poppet of the Valvistor

1
Introduction

THIS THESIS CONCERNS efficiency in fluid power systems. Novel ideas of how to design and control such systems are proposed. This first chapter gives an introduction to energy efficiency of fluid power systems, an overview of the aims and contributions and the state of the art in the area of independent metering.

A fluid power system is often an auxiliary system of some other system. It might be an industrial process, mobile machinery and so forth. The fluid power system transfers and/or transforms energy. The advantage of a fluid power system is its high power density which enables it to handle large amounts of power.

Since oil is the medium that handles the power, it is the oil that absorbs the heat generated by losses such as friction and throttle losses. The distinction between a fluid power transmission and a mechanical gear transmission, for example, is that the heated parts due to losses are easier to handle in a fluid power system. Since it is the oil that becomes hot in a fluid power system it is possible to cool the oil remotely from the actuator, e.g. in the return line. If the mentioned mechanical gear transmission had acted analogously the heated gears would have been replaced with cool ones continuously. The simplicity of cooling is one advantage of fluid power and contributes to its ability to handle more power than other solutions continuously. At the same time the ease of cooling has become a disadvantage of the fluid power systems. It is common to design fluid power systems where efficiency is not considered; an oil cooler is installed instead. This advantage of cooling possibilities gives fluid power something of a reputation for bad efficiency.

Fluid power machines (pumps and motors) can have a maximum efficiency of up to 95% and 90% over a substantial range of operation. Fluid power ***systems*** with an overall efficiency around 10% to 20% are not uncommon. Obviously, since the components themselves have higher efficiency, it has to be the system design that is the villain of the piece. In mobile systems,

for instance, it is common to use one single pump for supplying several load actuators. Even if the pump has variable displacement it is only when the pressure demands of the loads are equal an energy efficient operation is possible. Further, another reason for the low efficiency figures is that it is common to use pressurized oil from the pump even when lowering loads.

Most of the losses can be related to pressure drop over valves. In mobile systems one single pump used by more than one function is most common. As an example, in a load sensing system (LS), the highest load will determine the system pressure provided by the system pump. If more than one load is actuated simultaneously, only the load with the highest pressure demand can be operated efficiently since there has to be a throttle valve that adjusts the pressure level at the others. Figure 1.1 shows two simultaneous loads in an LS-system. The "wasted" throttled power is shaded dark grey in the figure, and the "used" light gray. Notice the difference in the "used" power to the "wasted" power ratio of two different loads in figure 1.1.

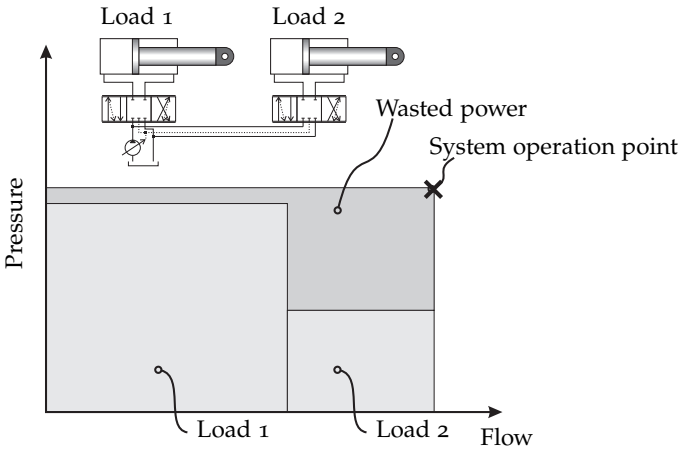

Figure 1.1 *Two different loads in an LS-system.*

A double acting hydraulic cylinder has two hydraulic ports. When actuated, one of them is connected to a high pressure and the other is connected to a low pressure, often via some kind of throttling valves. The conventional way of doing this is to use a valve with four ports and three positions, a 4/3-valve, see figure 1.2(a). The meter-in and meter-out orifices are then mechanically connected. In this thesis meter-in is the orifice/valve where oil flows into an actuator, for example a cylinder, meter-out is the orifice/valve where oil leaves an actuator. When lowering loads in conventional systems there is often a built-in disadvantage; the oil is then withdrawn from the high pressurized pump line. This means that energy is taken from the pump when it is actually possible to recuperate energy from the load into the system. An attractive way of reducing metering losses and avoiding inefficient

operations as mentioned in a system containing cylinders, is to use separate valves at meter-in and meter-out, see figure 1.2(b).

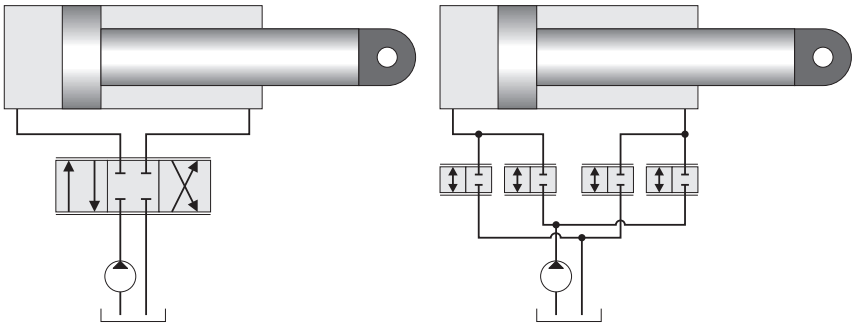

1.2(a) Traditional cylinder drive.

1.2(b) Cylinder drive with independent meter-in and meter-out orifices.

Figure 1.2 *System configurations.*

In a system, there is normally exists one high and one low pressure line. A double acting cylinder has two ports; one at each side of the piston, as mentioned above. Statically, the relation between the flow into one of the cylinder ports and the flow out from the other one is the area ratio of the piston and the piston rod areas (leakage ignored). Actuating such a cylinder in a certain direction by using oil from the high pressure line in the system can be done in two different ways. Normally, the returning oil is steered into the low pressure line. The other option is to return the oil into the high pressure line. The difference is the effective resulting force. In the first example, the resulting force from the cylinder is

$$F = A_{piston}p_{high} - \left(A_{piston} - A_{rod}\right) p_{low} \overset{p_{low}\approx 0}{\approx} A_{piston}p_{high}$$

while in the other case, when both cylinder chambers are connected to the high pressure line, the force is

$$F = A_{piston}p_{high} - \left(A_{piston} - A_{rod}\right) p_{high} = A_{rod}p_{high}$$

The cylinder can be regarded as a discrete transformer that can adopt two different states.

The above example of a cylinder can be utilized in a system where the meter-in and meter-out orifices of a cylinder are independently controlled.

1.1 Aims

The aims in this work have been to investigate and analyze the energy saving potential in mobile system as well as propose and analyze individual controlled metering system including its components.

1.2 Limitations

This thesis concerns the efficiency of mobile fluid power systems. Novel ideas of how to design and control such systems are proposed. Analyses and verification tests are also presented.

However, from a research point of view, the work is limited to energy efficiency. There are some discussions about other aspects, e.g. modularity and simplicity. These issues are of secondary importance and should not be considered part of the research project.

1.3 Previous research

One great difference between conventional systems and independent metering systems is that the latter usually consist of 2/2 valves while the former consist of 4/3 valves. In this work a poppet design called a Valvistor is used. This is a valve invented and developed by Prof. Bo R. Andersson at FluMeS, Linköping. Andersson proposed the hardware arrangement of an independent metering system. His intention was more to achieve a valve arrangement for controlling large flows. [Andersson, 1984]

An early work in the independent metering area is that of by Ph.D. Arne Jansson, FluMeS, Linköping. The main focus in his work is how to handle and control the extra degree of freedom in the independent metering system. No mode switching is considered. The energy savings concern minimization of the meter-out losses, not regeneration or recuperation. [Jansson et al., 1991] in [Jansson, 1994]

Another early work in the area of independent metering- or "split spool"-systems is an LQR-approach by Bengt Eriksson, KTH, Stockholm. Eriksson focuses on performance and the influence of friction in his work. [Eriksson, 1996]

Tekn. Lic. Magnus Elfving, FluMeS, Linköping has a physically based decoupling approach. Elfving also briefly takes up the energy aspects. [Elfving and Palmberg, 1996] in [Elfving, 1997]

In Tampere, Finland, extensive work has been carried out concerning digital valves utilizing independent metering. [Linjama et al., 2003] and [Linjama et al., 2007]

Ph.D. QingHui Yuan et al. have published work on the Ultronics™ valve, produced by Eaton Corp. [Yuan and Lew, 2005] and [Yuan et al., 2006].

Ph.D. Amir Shenouda deals with the Incova® system in his Ph.D.-thesis [Shenouda, 2006], see also [Shenouda and Book, 2005]. Keith A. Tabor has published work on the Incova® system [Tabor, 2005]. Joseph L. Pfaff has also published on the Incova® system [Pfaff, 2005].

The main difference between the work presented in this thesis and the work mentioned above is the control strategy. The choices of output signals

in the closed loops are new. Some functionality is kept in hardware to avoid critical sensor dependency.

1.4 Existing independent metering valves

In recent years a number of system layouts have appeared that utilize independent metering. The object is often to increase functionality as well as to reduce energy consumption. Sensors are commonly used in such systems to determine operating conditions, e.g. pressure transducers.

Examples of commercial independent metering systems are the Ultronics valve system from Eaton [Turner and Lakin, 1997] and the Incova® system from Husco [Stephenson, 2001]. Other researchers are also conducting studies in the area.

The idea of using mechanically decoupled valves in a cylinder drive is not new. For example, the Swedish company "Monsun Tison", nowadays in Parker Hannifin, had a valve system used for mobile applications called "Monti" as early as the 1970s. [Monsun-Tison, 1978]

In the area of industrial hydraulics, independent metering has been used a long time. The use of independent metering valves in industrial applications is usually not for energy saving reasons. The reason is rather that there are on/off-control applications; poppet valves are then suitable. Another reason is that poppet valves are suitable for the substantial flows that are often present in industrial applications. Examples of independent metering system design can be found in [Backé, 1974].

1.5 Research results

The research in this project mostly deals with the question of: "How to design and control a hydraulic cylinder drive in the most energy efficient way given only one single system pump?". The result/answer is presented in this thesis. There are also analyses of the system and the appurtenant valves.

The two main results are:

Plausible reduction of energy consumption in a "real application" It is shown that it is plausible to reduce the energy consumption by about 20% of the working hydraulics (lift, tilt and steering functions) in a wheel loader equipped with a load sensing system of today. This result motivates the rest of the work.

System design A novel type of individual metering valve concept is presented, including a pioneering way of selecting the control variables and also how to control the system.

1.6 Contribution

The most important contribution of this work is a novel system layout in mobile hydraulic systems characterized by a different approach due to choice of control variables. The control strategy is partly verified in a real world application.

An energy study of a wheel loader that works in a representative working cycle, a so called short loading cycle, is presented in the thesis. It shows the ability of energy efficiency improvements with different system layout principles.

The thesis also delivers some theoretical analysis regarding suitable valves in the area of flexible mobile systems.

2

Energy efficiency in mobile hydraulic systems

Fluid power systems are widely used around the world in different applications. Fluid power is used to transfer energy between different parts of a system, for example in vehicles. System developers often mainly focus on performance; energy consumption is not prioritized. Energy consumption has come to be a more and more important design variable besides performance. Mobile applications often use internal combustion engines as their energy source. This means that fuel prices have a significant impact on mobile fluid power systems. Another factor, that is perhaps driving development even more strangly, is the legislation expected in the future to further restrict pollution.

The energy efficiency in a mobile system is mainly a question of system design, not the efficiency of the components themselves. Different system layouts have different efficiency. The most common systems are

Constant pressure Uses a variable pump that is constant pressure controlled or a fixed pump that works against a pressure relief valve.

Open centre (Constant flow) Uses valves with an open centre channel that is open when the valve is closed and closed when the valve is open. This gives the system a low standby pressure when not activated. The pump can be fixed or variable; if it is variable it is controlled to minimize the flow in the open centre channel. When using a fixed pump the system can be seen as a constant flow system.

Load sensing (Variable pressure) Works like a constant pressure system

where the constant pressure is matched with the greatest load to minimize the pressure loss. The pump is variable.

Valveless with displacement control (Variable flow) This system has one pump dedicated to each load. The actuation speed is then controlled by the displacement of the pump. There are then no pressure losses over any valves. The drawback is the need for more than one pump and the response of the pumps is also critical.

In the following sections, different systems are shown and compared. The condition is that there is a cylinder drive present with an attached load.

2.1 Constant pressure

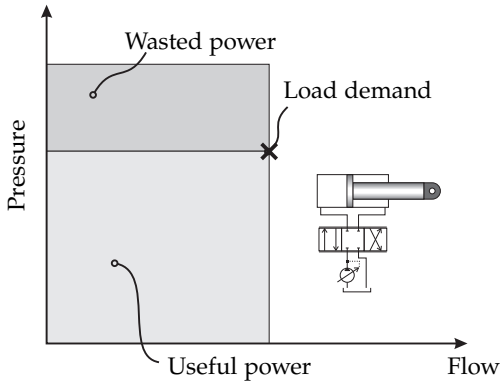

Figure 2.1 *Flow and pressure characteristics in a constant pressure system.*

A constant pressure system, figure 2.1, is a rather simple system configuration. Its efficiency tends to be low. It is a reasonably energy efficient option if the present loads tend to be constant; the constant pressure is then matched to the mentioned constant load.

A constant pressure system is used when utilizing secondary control [Palmgren and Rydberg, 1987] in [Palmgren, 1988]. Secondary control means that the loads, often variable motors, are controlled by their displacements to match the system pressure. So far, this kind of system is used mainly in stationary industrial applications. Its efficiency can be rather high. One disadvantage that comes with this system layout is that there is always a high system pressure present. This makes the system more sensitive to contamination and wear.

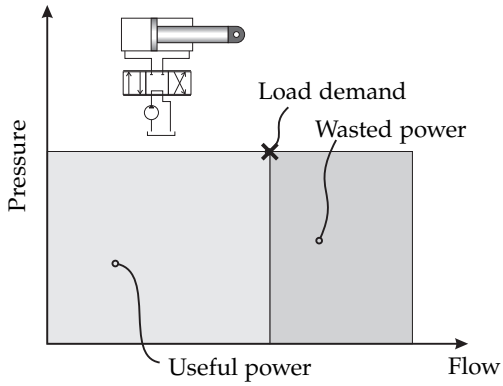

Figure 2.2 *Flow and pressure characteristics in a constant flow system.*

2.2 Open centre

An open centre system, figure 2.2, is characterized by the valves that are used. There is an open centre channel that is fully open when the system is idle and the valve is closed. By means of this open centre the system pressure is kept at a low level when the valve is closed. When the valve is activated, the open centre channel starts to close and at the same time the motor port at the valve opens between the pump line and the load. By closing the open centre, the system pressure will start to increase.

Open centre systems can often be found in heavy mobile applications. This is because an open centre system is regarded as a "soft" system. The "soft" feeling comes from the fact that an open centre system is a force controlled system; other systems are often designed to control speed (flow control). The accelerations in a open centre system are then rather smooth. This is often a preferred property in a system that deals with heavy loads. From a control theory point of view it can be said that the flow is heavily load dependent which means that the system has naturally high damping.

2.3 Load sensing

A load sensing system (LS-system), figure 2.3, works like a constant pressure system where the constant pressure is set by sensing the greatest load to minimize the pressure loss. The pump is variable. [Krus et al., 1987] and [Krus, 1988]

A mobile system containing several different cylinder drives equipped with a single LS-pump has a number of advantages as well as disadvantages. One of the main advantages is the need for only one pump. This makes the fluid power system compact and cost-effective. A challenge is to keep the

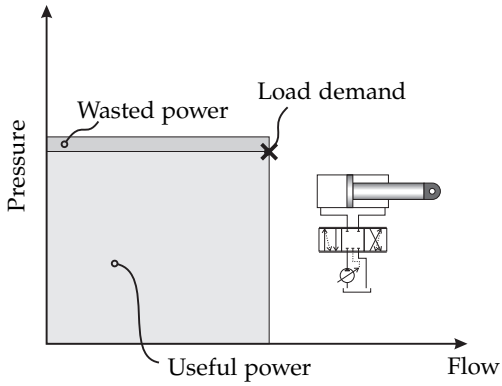

Figure 2.3 *Flow and pressure characteristics in a load sensing system.*

hydraulic losses at a low level, especially losses when loads with different magnitudes are present at the same time. Currently there are two main options to avoid these kinds of losses. They either supply each cylinder from different dedicated pumps, or use hydraulic transformers with each cylinder together with one system pump. Both solutions entail undesired increased cost and more space usage. Another way to reduce the losses is to allow the cylinders to operate in regenerative and recuperation mode when possible. The cylinders can then be seen as discrete hydraulic transformers as mentioned earlier.

2.4 Valveless

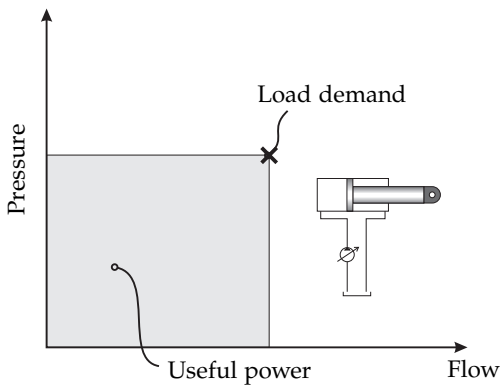

Figure 2.4 *Flow and pressure characteristics in a displacement controlled system.*

The most obvious way of avoiding throttle losses is of course not to use

valves at all, see figure 2.4. Then the speed of the loads is controlled by flow controlling the pump, either by displacement control or rotation speed control of the pump input shaft. Some of the drawbacks are that there need to be several pumps in a system, one for each load. Each of these pumps has to be designed to handle the maximum flow. They must also be able to control down to zero displacement. Of course, a fixed pump can be used in this kind of system if the rotational speed at the input shaft is controlled instead of the displacement. In a system with a single system pump the pump could be downsized when every load is not actuated at full speed simultaneously very often.

Another variant of a valveless system is to use one single pump and then also add transformers between the loads and the pump line. Then the transformers can transform the load pressure of every loads to match the system pressure. [Achten et al., 1997] and [Achten, 2007]

A common disadvantage of the valveless systems mentioned above is that there are a great many machines involved. This means that there are more losses, such as fluid friction in machines and so on.

Valveless systems are not commercially common as working hydraulics in mobile applications (lift, tilt and so on). They are mainly found in transmissions for propulsion and in aerospace (EHA), see [Raymond and Chenoweth, 1993]. It is a hot research topic in the area of mobile hydraulics; e.g. [Rahmfeld and Ivantysynova, 2001]

2.5 System summary

The systems described above are all used in different applications. Closed and open centre systems can be considered rather simple and often inefficient systems. They are mainly used when the component costs themselves are important. In such applications, where the system only is operated occasionally, efficiency may not be the most important design variable.

In a load sensing system the idea is that the pump should not deliver more pressure than necessary. When more than one load is actuated, often only the heaviest load is operated efficiently, see the example in figure 1.1. This issue is solved in a valveless system. When every load has its own pump the pump pressure can always be matched to the present load. In the case with transformers they will be secondary controlled to match the pump pressure.

Imagine if there could be a system that transforms the load pressures to match the system pressure and at the same time avoids the high numbers of machines and thereby their cost and losses!

This thesis proposes a system that can be placed somewhere between the LS and the valveless system. As mentioned in the introduction, chapter 1, a cylinder can be regarded as a discrete transformer. Let us look at an example. Assume a situation where there are two loads present, one bigger than the other. The system configuration utilizes independent metering and is shown

in figure 2.5 where the loads can also be seen. In figure 2.5(a) the valves are controlled as a 4/3 valve in a conventional system; the cylinders are fed from the pump and the return oil is steered to the tank. In figure 2.5(b) the same loads are present. By connecting both cylinder ports to the pump line at the lighter load, load 2, the cylinder pressure is matched with/transformed to the pump pressure and the throttle losses are reduced. In this specific example the small load makes a perfect match to the pump pressure. Of course, this is not always the case. This is done for merely visualization.

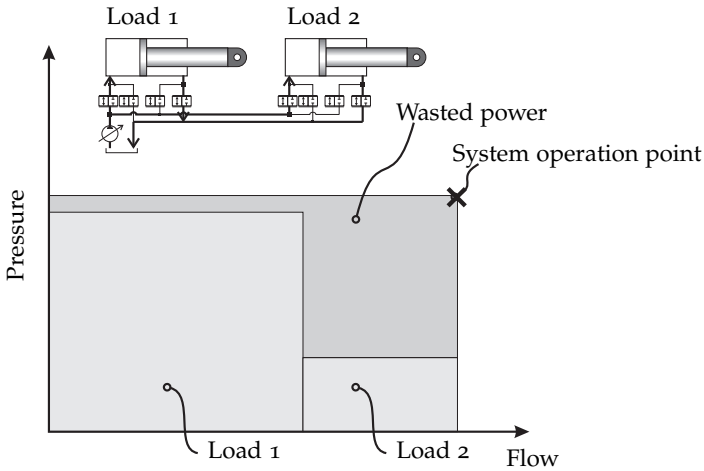

2.5(a) Controlled as a conventional system.

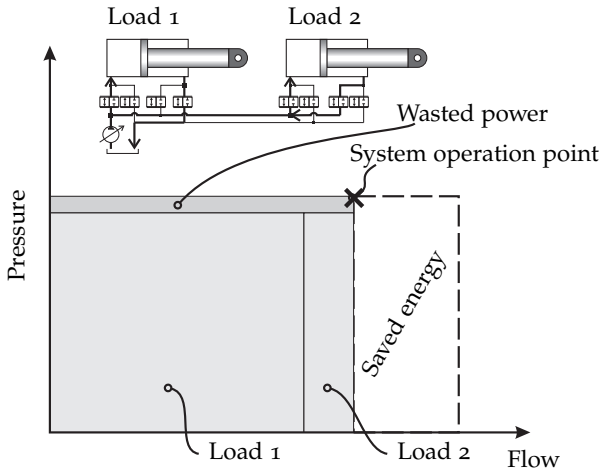

2.5(b) Controlled by utilizing regeneration at the smallest load.

Figure 2.5 *An example to visualize the use of a cylinder as a discrete transformer.*

3

System configuration

This chapter describes the novel system layout proposed in this thesis, patent pending. Both the hardware and the control laws are shown. Pressure compensated proportional controlled 2/2 poppet valves of a modified Valvistor type are used, see chapter 4. The sensors that are used in the control loop are position sensors measuring the position of the compensator spools.

3.1 Hardware layout

The system is designed to meet the flexibility requirements for utilizing energy efficient operation, e.g. power recuperation and regenerative drive. In this thesis recuperation is when flow is taken from a tank, pressurized by external loads and then fed back into the pump line. For example, if one cylinder is lowering a load and the cylinder is used as a pump and feeds the energy from the load motion into the system. Regeneration is when both cylinder chambers are connected to the pump line. For example, when a cylinder is fed by pressurized oil from the pump in the piston chamber and the superfluous energy in the piston rod chamber is returned to the pressurized pump line, see figure 3.1.

The system has to be able to connect pump or tank to each cylinder chamber independently of each other. The possible configurations are more or less described by figure 3.2. The cylinder drives in the system can consist of two proportionally controlled 3/3 valves or it can consist of four proportionally controlled 2/2 valves. The restriction of using two 3/3 valves is that it is not possible to connect a cylinder port to pump and tank simultaneously. The only reason to do this appears to be to handle dynamic issues since there will only be a waste of power to drive flow from the pump directly to tank.

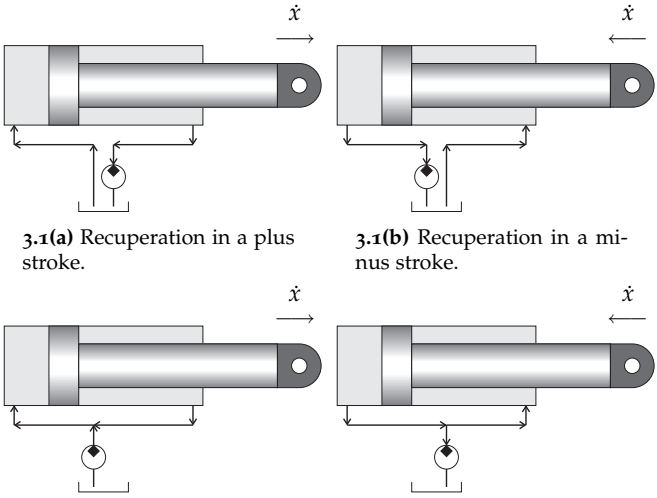

3.1(a) Recuperation in a plus stroke.

3.1(b) Recuperation in a minus stroke.

3.1(c) Regeneration in a plus stroke.

3.1(d) Regeneration in a minus stroke.

Figure 3.1 *Definition of the concepts of recuperation and regeneration.*

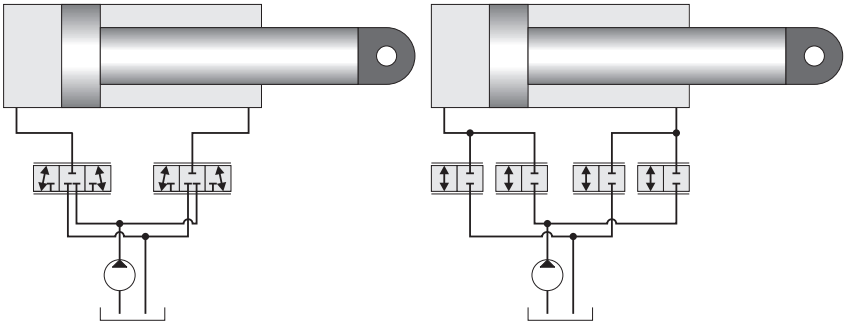

3.2(a) Utilizing 3/3 valves.

3.2(b) Utilizing 2/2 valves.

Figure 3.2 *Possible principal valve configurations in an individually controlled meter-in and meter-out system.*

Systems that utilize independently controlled meter-in and meter-out valves often have most of functionality moved into software, such as pressure compensation. That means that there need to be sensors in the system to enable functionality as flow control in such configurations. [Turner and Lakin, 1997] and [Yuan and Lew, 2005]

In this system the ideas are different. The most important functionality is kept in hardware. Pressure compensation, for instance, is kept in the hardware in this system, see figure 3.3. In figure 3.3(a) the pressure compensation feature can be seen in the pilot circuits of the Valvsitor valves. The position of the pressure compensator spools is measured and used for mode selection as well as control feedback signals. The control loops are discussed later on in this chapter. Details of the bi-directional, pressure compensated valves can be found in chapter 4.

3.2 Controller scheme

There are two control aims in this novel system:

1. Follow the reference speed given by the operator
2. Use as little energy as possible from the pump to utilize the desired motion given by the operator

The controller is split into two different parts. The first is the operator who controls the speed of the cylinder. The speed control loop is of an open loop control type; of course, the operator himself closes the loop. The second controls which valves to use for achieving the energy saving ability. There are up to four different choices depending on the load:

1. The conventional way; use the pump for supplying the cylinder with flow and leave the return flow from the cylinder to the tank.
2. Regenerative operation; use the cylinder as a transformer by connecting the cylinder chambers and thereby transforming a small load with large flow into a heavy load with a small flow.
3. Recuperative operation; use the cylinder as a pump and let the load deliver flow into the pressurized pump line.
4. Float operation; connect both chambers to tank and let the load drive itself without any energy consumed taken from the pump.

There is an intuitive way of ranking these different options from an efficiency point of view

1. Recuperative operation; energy is gathered from the load and can be used at other actuators in the system.

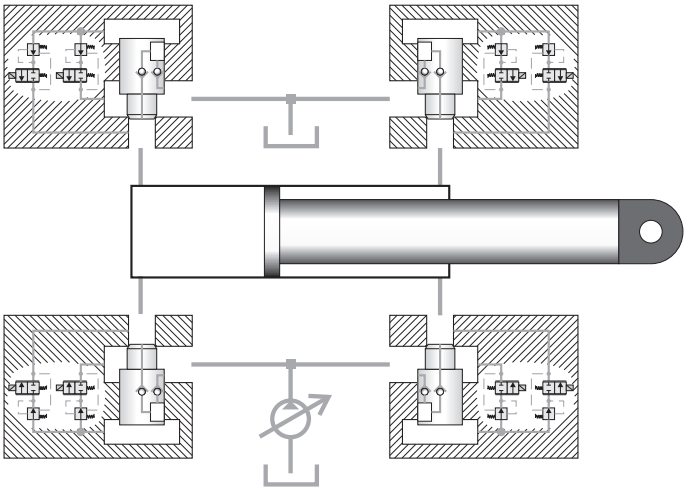

3.3(a) Hardware layout, see chapter 4.1 for details of the valves. However, observe that the orientation of the Valvistors should be considered due to the preferred leakage characteristics since the Valvsitor is almost leakage-free in one flow direction.

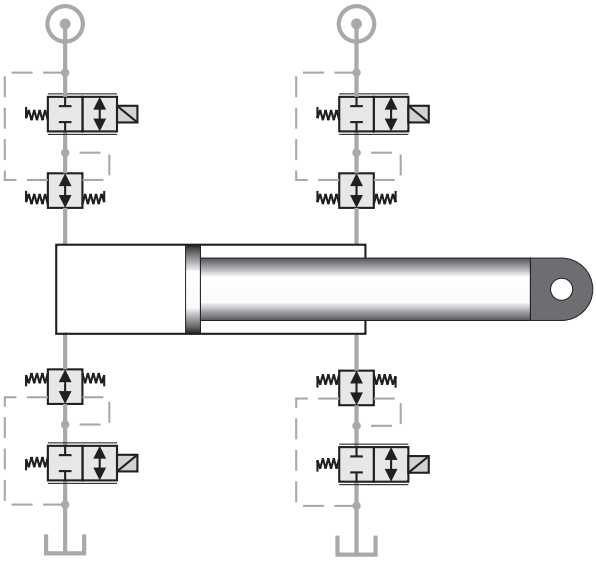

3.3(b) Hardware described schematically. Note that the double pilot circuits make the valve bi-directional.

Figure 3.3 *Description of the hardware used in the system.*

2. Float operation; no energy is needed to perform the operation.
3. Regenerative operation; a good option if the pump pressure is high at the moment (another load has a higher pressure demand) so that less flow is then taken from the pump.
4. The conventional way; has to be used at the load with highest pressure demand. By using independent meter-in and meter-out valves the meter-out pressure drop can be smaller than usual. In this thesis meter-out always denotes where flow is leaving the cylinder and meter-in always relates to flow coming in to the cylinder.

The condition that has to be fulfilled to be able to operate in the recuperation operation case is that the load is big enough to build up a bigger pressure in the cylinder chamber than the pump pressure, and of course the load has to act in the desired motion direction. Since pressure compensators are used for flow control the position of the spools in the compensators gives the information about whether a valve is capable of delivering flow in a certain flow direction or not.

If the condition to operate in the recuperation operation case is not fulfilled, the system will try to operate in the float operation case. This operation case can be analogously described as the recuperation operation case; the only difference is that the oil is delivered to the tank instead of the pump.

These two operation cases, recuperation and float operation, are here called meter-out control mode since the speed (or flow) control is effected at a meter-out valve.

When neither of these operation cases can be used, the system will start using oil from the pump. The speed control is now effected at the meter-in valve. As mentioned previously the regenerative operation case is preferred to the conventional operation case, at least when this load is not the biggest. This can be realized by controlling the position of the compensator spool of the meter-in valve. If the compensator at the meter-in valve is controlled to be held in a relatively open position, this is the same thing as saying that the pressure drop over the same valve is controlled to be held low. The pressure level in the cylinder chambers is then as high as possible for the given pump pressure. If the load is small enough the pressure in the meter-out chamber of the cylinder is higher then the pump pressure and the regenerative operation is enabled; otherwise the meter-out valve to tank has to be used.

Both meter-out valves, the one from the meter-out cylinder chamber to tank as well as the one connected from the meter-out cylinder chamber to pump, are used to control the position of the compensator at the meter-in valve in a closed loop manner, see figure 3.4. By considering the choice of reference positions of these control loops the regeneration operation case can be prioritized over the conventional operation case. Figure 3.5 shows the reference values of the two different control loops. The steady state opening (open or closed) of the meter-out valves is also shown. Note that the valve

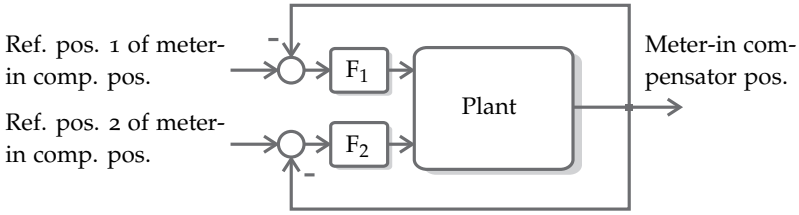

Figure 3.4 *Block diagram of the meter-out valve control were F_1 is the controller for the meter-out valve to the pump line and F_2 is the controller for the meter-out valve to the tank line. The reference values (Ref. pos 1 & 2) are explained in figure 3.5.*

connecting the meter-out cylinder chamber and pump remains open longer than the valve connecting the meter-out cylinder chamber and tank when the pressure drop over (or position of) the compensator at the meter-in valve increases. The conventional operation case and the regeneration operation case exist implicitly at the same time in the meter-in control mode.

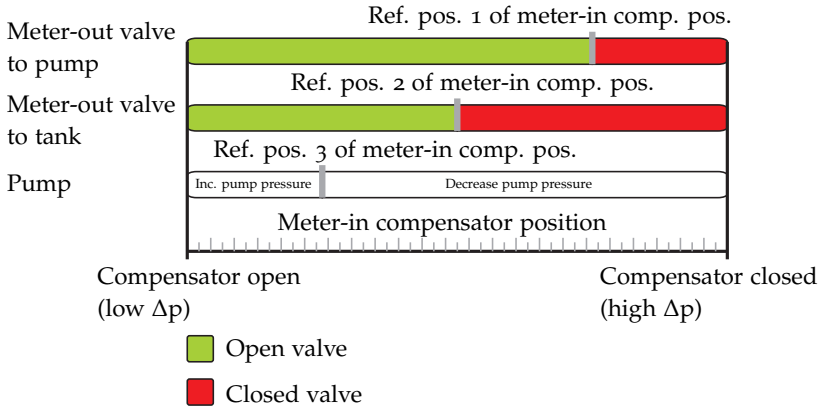

Figure 3.5 *Illustration of reference values for the closed loops controlling the compensator position of the meter-in valve shown in figure 3.4. The stationary position of the meter-out valves is also shown by the red and green colours.*

The state machine selecting modes is illustrated in figure 3.6.

The structures of the control loops are shown in figure 3.7. The mode selector chooses which valves to be active according to figure 3.6. Then the different control algorithms are activated as shown in the software box in figure 3.7. The closed loops in the software block are the control of the compensator positions that are fed into the software from the compensators in the hardware. The joystick signal controls one of the valves as described above in an open loop manner.

So far the pump control has not been discussed. It is desirable that the pump only should be controlled by the load with highest pressure demands.

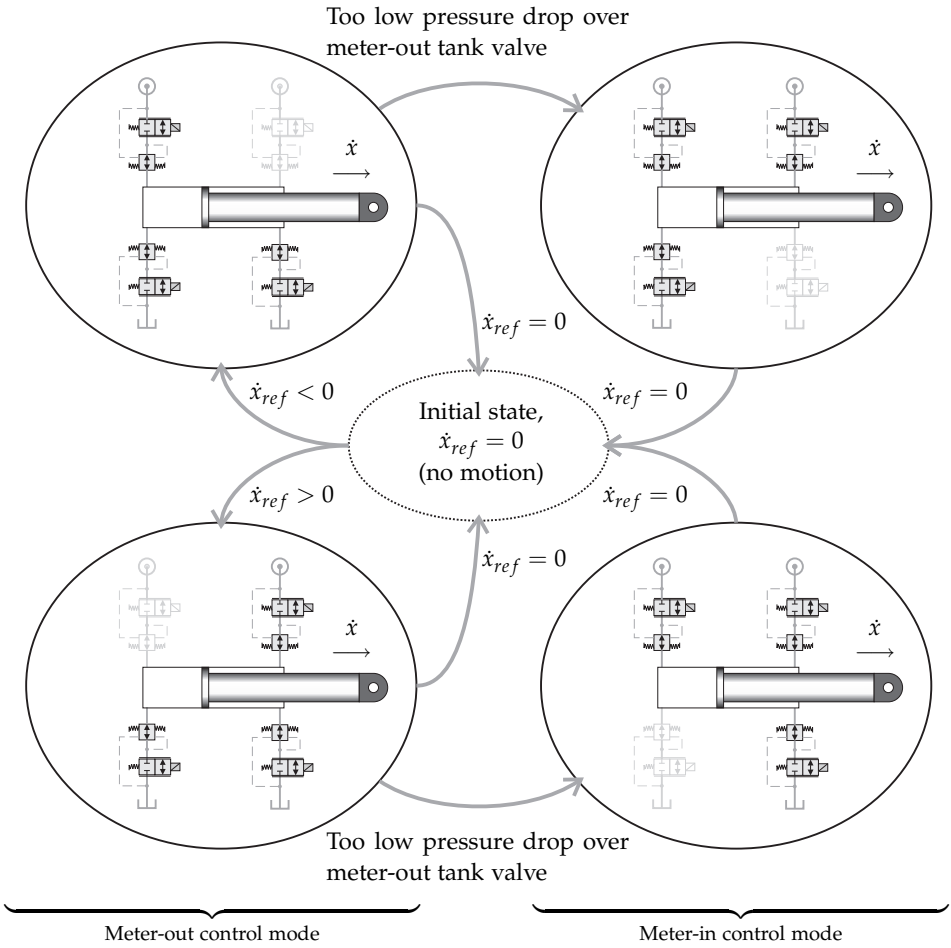

Figure 3.6 *Principal state machine description of the control scheme.*

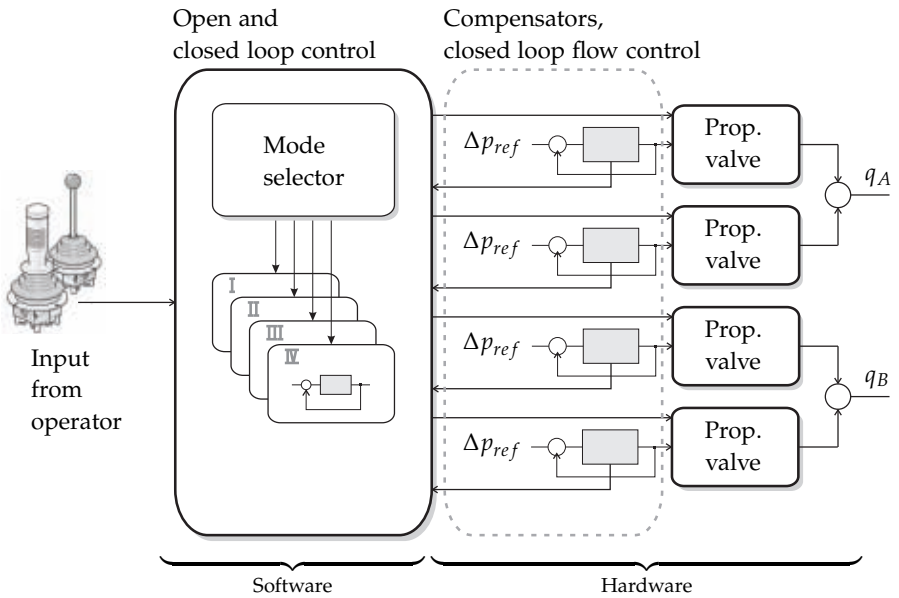

Figure 3.7 *This is an overview of the control loops in the system. The electrical feedback signals are the position of the compensator spools, which are the signals from the hardware back into the software block in the figure. The inner flow control loop is kept in the hardware by the compensators. The software is split into two parts; it chooses which metering valve to use and also controls the meter-out valves in the meter-in mode in a closed loop manner. The signal from the operator controls the flow magnitude in an open loop manner; the loop is of course closed by the operator.* q_A *and* q_B *are the flows to the respective cylinder ports.* Δp_{ref} *is a constant and is related to the pre-load of the spring in the compensators.*

Analogous with the meter-in control mode, described in figure 3.5, the pump controller is set to control the compensator position of the meter-in valve. To get the right prioritization, the reference value is set to the left of the other reference values, as shown in figure 3.5. To get better response it is also desirable to feed forward the flow needs to the pump controller. The flow needs can be estimated from the joystick signals and the system controller.

3.3 Enhanced tank pressure

To avoid cavitation when taking oil from the tank, for example in the meter-out control mode in figure 3.6, the tank pressure can be increased. A simple way of doing so is to have a relief valve in the return line (possibly electrically controlled), see figure 3.8. Since the main controller has information on how much flow flows in the different valves in the system, at least approximately,

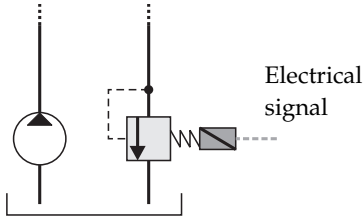

Figure 3.8 *System with enhanced tank pressure.*

the meter-out mode can be enabled and disabled according to how much flow there is available in the return line.

If the tank pressure is increased to a higher degree it is possible to adopt the same control strategy when taking oil from the tank as the control strategy used in the meter-out control described in figure 3.4. Then, both mode categories in figure 3.6 would be called meter-in control.

3.4 Example of an "over-centre" motion

To clarify the control strategy even more, an example will be detailed in this section. Events and mode switches in the controller through a classical "over-centre" manoeuver of a crane arm are described below. The crane arm is shown in figure 3.9.

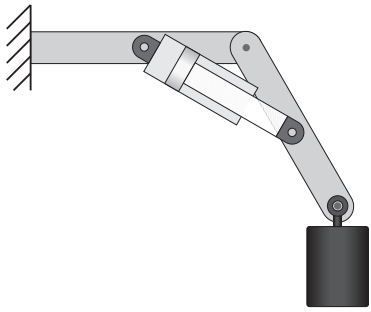

Figure 3.9 *System configuration in the example.*

The motion of the arm goes from the initial position, figure 3.10, to the position when the arm is pointing straight to the right in the picture. Assume constant pump pressure and that when the valves are closed, the load itself generates higher pressure in the cylinder chamber than the pump pressure. At the beginning of the motion the system detects that the compensator at the meter-out valve to pump is "active", which means that the position is not fully open and the pressure drop over the meter-out valve is greater than the

pre-load of the compensator spring. The meter-in valve from tank will be fully opened and the operator's speed reference is controlled by the meter-out valve to the pump line. The cylinder is now used as a pump and the potential energy stored in the load is now fed into the system and can be used somewhere else, e.g. in a transmission. The controller is now present in the lower left of figure 3.6, the meter-out control mode.

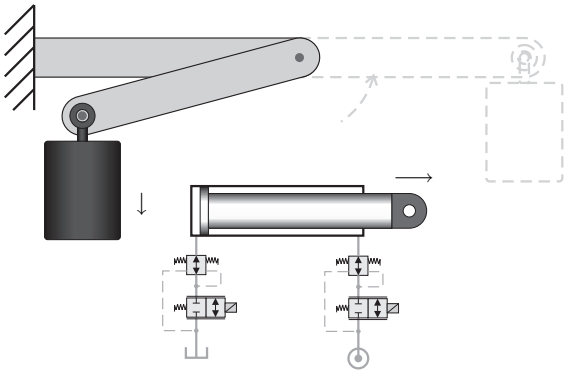

Figure 3.10 *Initial position of the crane used in the"demo-case". The final position is shown by the dashed arm. In the first part of the motion meter-out control is applied. The load is big enough to provide the system with pressurized oil back to pump line.*

Due to the change of geometry during the operation, at a certain point the load seems lighter from the cylinder's point of view. This results in the pressure in the cylinder chamber decreasing and eventually approaching the pump pressure. Before that happens, the compensator at the valve used, the valve connecting the cylinder with the pump at the meter-out side, will become more and more open. The meter-out valve that connects the same cylinder chamber to tank still has an "active" compensator since the tank pressure is much lower than the pump pressure. When the compensator in the valve that is used (cylinder-pump) is open to a predefined degree, the controller will close the valve. At the same time it will open the other meter-out valve (cylinder-tank) if the compensator at this valve is active; in our case this happens in figure 3.11. No energy is needed from the system, but the load is too light to deliver any energy to the system. The controller is still present in the lower left of the figure 3.6, meter-out control mode.

At the point where the load goes over-centre, or slightly before in reality due to friction and such, the load has to be fed by energy from the system. This is because the load and the demanded speed are pointing in opposite directions. The geometry makes the load extremely light just after the over-centre point. The pump pressure, as mentioned before, is fairly high. The compensator used at meter-out from the cylinder to the tank is now becoming

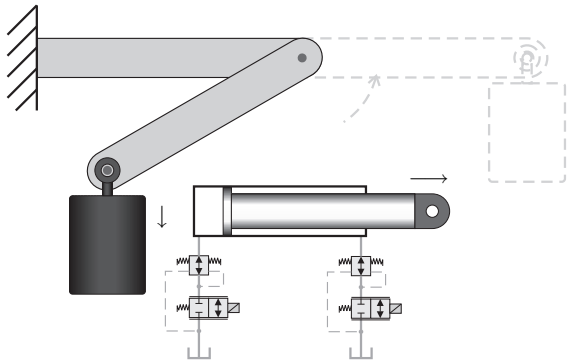

Figure 3.11 *The geometry of the crane makes the load too light to deliver flow to the pump line. At this point the meter-out flow goes to the pump. It is still in meter-out control mode.*

too open and the controller goes into meter-in control mode, the lower right part of figure 3.6. Now the operator's speed reference controls the opening of the meter-in valve from pump to cylinder. The closed loop control of the compensator position of the meter-in valve is activated at both of the two meter-out valves. Their reference values can be seen in figure 3.5. In steady state, the compensator position in our case is at the left part of figure 3.5. Both valves are connected to the pump and the cylinder is automatically differentially driven to minimize the meter-in pressure drop. See figure 3.12.

As the load moves upward, the geometry changes the load on the cylinder; it increases. At a certain point, the pump pressure is too low to drive the cylinder differential. Then the compensator at the meter-in side will become too open. Looking at figure 3.5 it can be seen that the meter-out valve to tank will open. The normal drive is now using the full pump pressure to lift the load the last part of the motion, see figure 3.13. The meter-out valve to pump is still open but there will not be any flow in the opposite direction, from pump to cylinder, because of the check valve functionality built-in in the Valvistor valve, see chapter 4.1.

Principal diagrams of the present pressures and flows in the over-centre motion can be found in figure 3.14. It is a simplified sketch, e.g. the pressure drop due to the compensators is ignored. The area ratio, κ, is assumed to be 0.7 which is a common area ratio in mobile cylinders. The pump pressure is assumed to be constant during the whole motion; it can be determined by a higher load for example. The first diagram shows the static load case during the motion, without any controller and/or valves. The middle diagram shows the cylinder pressures when the proposed controller is in use. The

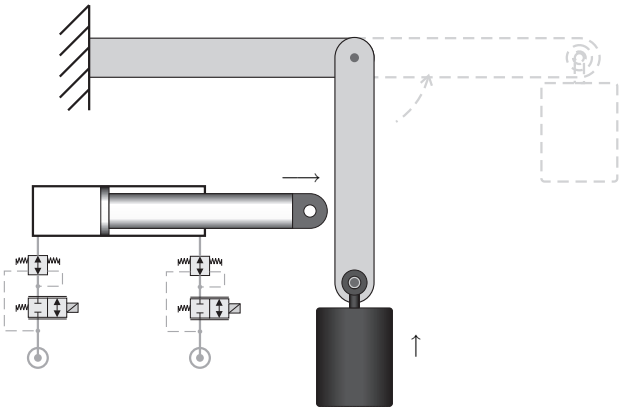

Figure 3.12 *When the load goes over-centre the load needs flow from the pump to be able to lift. Since the geometry makes the load relatively light at this point the controller goes into the regenerative part of the meter-in control.*

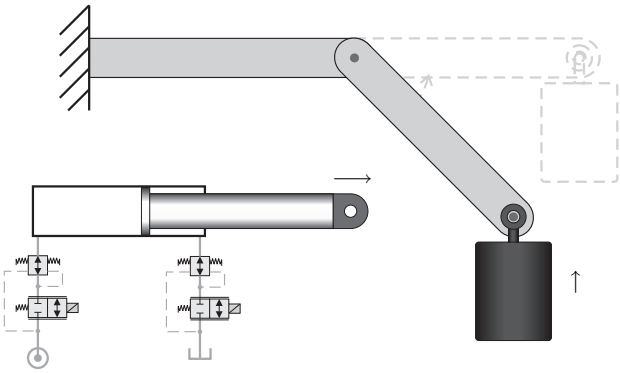

Figure 3.13 *At this point the load gets heavy. The whole pump pressure needs to lift the load.*

bottom diagram of figure 3.14 shows the flow used from the pump at the assumed pump pressure during the motion. Observe that the flow diagram can also be seen as a relative power consumption diagram; just multiply it with the assumed pump pressure (which is constant). In the flow diagram it can be seen that the cylinder drive is actually delivering power/flow to the pump line in the initial lowering phase of the motion.

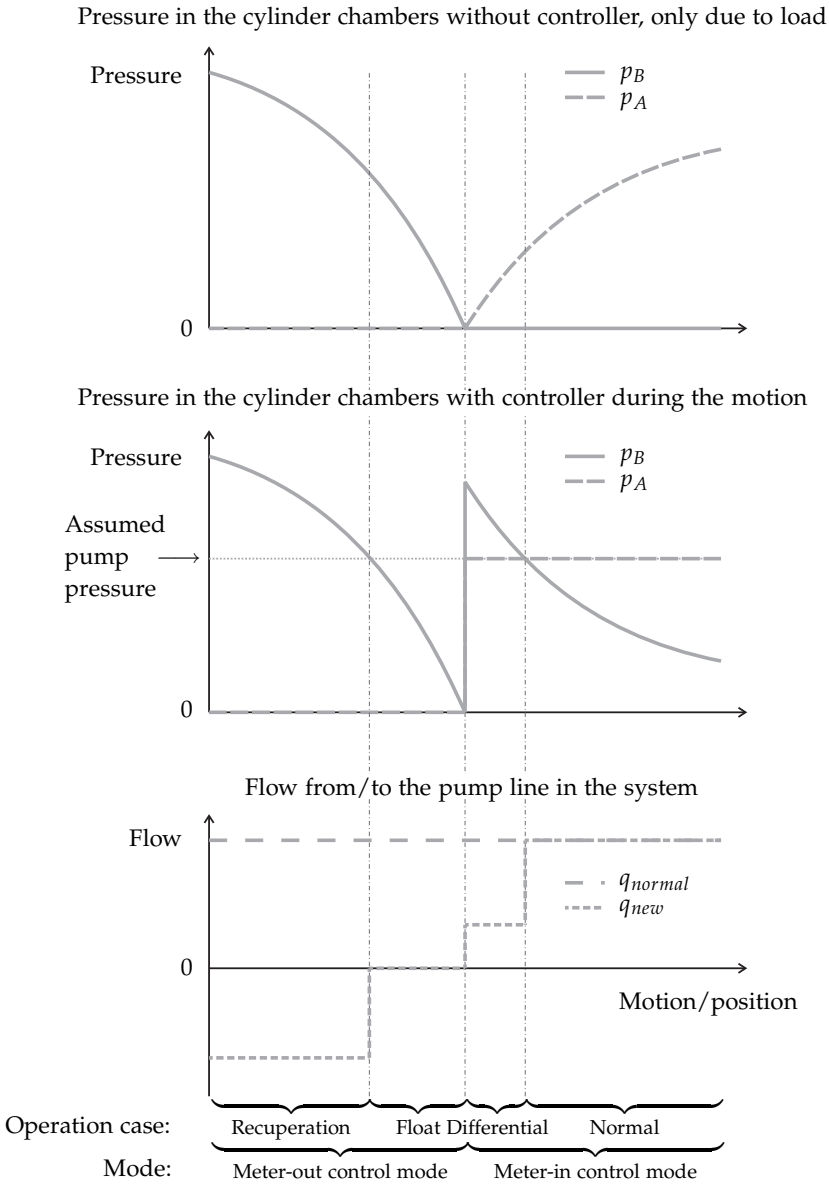

Figure 3.14 *Principle overview of the pressures and flows in the system during the over-centre motion. The q_{new} is supposed to illustrate that all flow is withdrawn from the pump line into the large cylinder chamber during the whole motion in a normal system. p_A is the pressure in the large cylinder chamber and $p_B$is the pressure in the small cylinder chamber.*

4
Valves

The flexible fluid power cylinder drive described in this thesis needs more number of valves than a traditional system. On the other hand, simpler valves can be used. 2/2 proportionally controlled valves meet the requirements of this system.

The most common proportional valves are of the spool valve type. Spool valves are suitable for traditional systems because of the simplicity of control. More than one orifice is, by the mechanical connection, often controlled by only one actuator. In this new kind of system the different orifices are individually controlled. Therefore, the mechanical connection in spool valves at the orifices can not be utilized as an advantage.

Poppet valves seem to be a suitable choice since their design is often simpler then a spool valve design and is of the 2/2 type. Unfortunately, they are also often of the on/off type. However, there are a number of designs that allow proportional control. Some examples are shown in figure 4.1 and are also briefly described below.

Electric feedback servo This principle uses an electrical signal from a position sensor as feedback. The properties of such a design are mainly determined by the electrohydraulic actuator, statically and dynamically. It is a flexible configuration. A drawback is that it is totally dependent on electronics. See figure 4.1(a).

Force feedback servo The position loop in this design is closed by the spring arrangement between the pilot valve and the main poppet itself. When the main poppet lifts the pre-load of the spring between the poppet and the pilot is increased. Depending on the applied external force, F_{input}, the steady state occurs at different main poppet openings. The input force is often realized by a current-controlled solenoid. See figure 4.1(b).

Mechanical feedback servo (Follow-up servo) In this design the pilot orifice is made directly in the main poppet. A rod then controls the open-

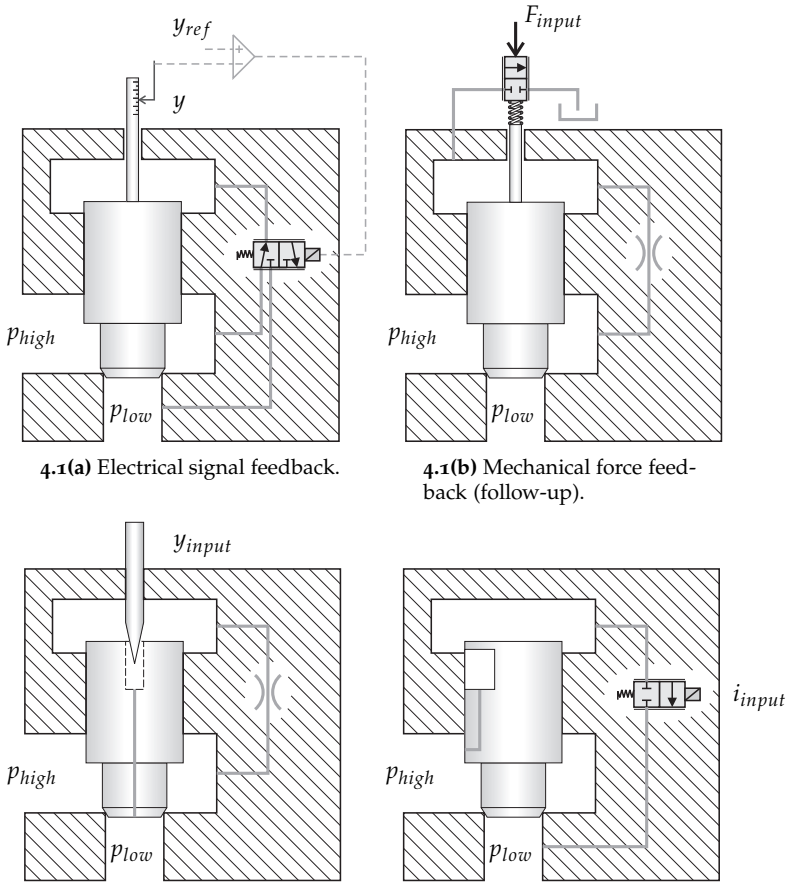

4.1(a) Electrical signal feedback.

4.1(b) Mechanical force feedback (follow-up).

4.1(c) Mechanical position feedback.

4.1(d) Hydraulic position feedback (Valvistor).

Figure 4.1 *Different designs of proportionally controlled poppet valves.*

ing degree of the pilot orifice, it is a needle orifice. By moving the needle causes the pilot orifice to open. The pressure then decreases in the control chamber above the poppet and the poppet lifts and closes the needle orifice. The main poppet then follows the pilot rod. The position of the rod can for example be achieved by using a step motor, a solenoid etc. See figure 4.1(c).

Combined force feedback and follow-up servo There are solutions that utilize both the follow-up and the force feedback mechanisms, for example to increase the stiffness in the position control loop of the main poppet.

Hydraulic position feedback (Valvistor principle) The valvistor principle utilizes the position of the main poppet to control an orifice. By force equilibrium of the main poppet, the opening of the orifice mimics the pilot valve opening. The result of the mimicking behavior is that the flow through the main poppet is an amplification of the pilot flow. See figure 4.1(d).

In this work the Valvistor concept has been chosen as the valve element. The main reason for choosing this valve is the ability to keep functionality in small valves in the pilot circuits. Another reason is that it is relatively simple to make it bi-directional, see section 4.1.2.

4.1 The Valvistor valve

The Valvistor valve was originally developed at Linköping University in the early 1980s by Prof. Bo R. Andersson, see [Andersson, 1984]. The Valvistor principle was first produced by Hydrauto, a Swedish valve manufacturer. The Eaton Corp. in the U.S. is now manufacturing valves that use the Valvistor principle. Other research on the Valvistor valve has been performed after Andersson, e.g. by Ph.D. Henrik Pettersson, who developed the "twin Valvistor" which is a design that increases the Valvistor's bandwidth by putting a Valvistor valve in the pilot of another Valvistor [Pettersson and Palmberg, 1999] in [Pettersson, 2002].

4.1.1 Working principle

The Valvistor valve is a poppet valve. The feature that makes it a Valvistor is the variable orifice that connects one port to the control chamber above the poppet. This orifice is often a rectangular slot; the opening area of the slot is then proportional to the opening stroke of the poppet itself. Figure 4.2 shows a Valvistor in the standard design. The slot closes a hydraulic control loop that controls the position of the poppet. The force equilibrium yields the pressure in the chamber above the poppet. The slot orifice then assumes

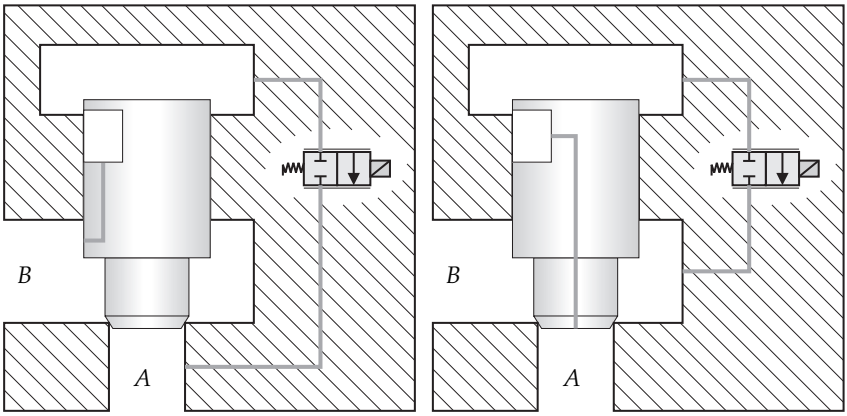

4.2(a) B-type. **4.2(b)** A-type.

Figure 4.2 *The Valvistor valve.*

the position that corresponds to the opening area so that the right pressure drop is met.

The pilot flow drains the control chamber of oil at the same time as the slot orifice delivers oil into it. To fulfil the force equilibrium the pilot valve opening and the slot orifice opening are equal, assuming that the same flow regime is present at the different orifices. This means that the opening of the slot orifice mimics the pilot valve opening. The main poppet position is controlled by the opening of the pilot valve. The Valvistor valve acts as a flow amplifier, similar to the transistor component in the electrical world. The ideal flow gain is described by equation (4.1).

$$g_{ideal} = 1 + \frac{\frac{w_m}{w_s}}{\sqrt{1-\kappa}} \tag{4.1}$$

Were w_m is the area gradient of the main orifice and w_s is the area gradient of the slot in the main poppet. κ is the area ratio of the inlet area of the poppet and the control chamber area, A_m, of the poppet.

Since the main poppet mimics the pilot valve a pressure compensated pilot valve results in a pressure compensated main stage. This valve is able to handle substantial flows due to the size of the actuated pilot valve. In Eaton's commercial valves they have utilized flow forces at the pilot valve to make it pressure compensated.

The description above is true only for one flow direction. In the opposite flow direction the valve acts as a check valve. This feature can be utilized as an anti-cavitation function for example. In the application of an individually controlled, or split spool, system the valves need to be proportionally operable in both flow directions. The next section describes how the Valvistor concept can be extended to handle the bi-directional issue.

The dynamic properties of the Valvistor valve are dominated by a first order effect related to the exchange of oil in the control volume above the poppet through the slot orifice and the pilot valve. This break frequency is described approximately by equation (4.2)

$$\omega_b = \frac{C_q w_s}{A_m} \sqrt{\frac{2}{\rho} (1 - \kappa) (p_B - p_A)} \tag{4.2}$$

More details on the dynamics of the Valvistor can be found in [II]. An overview of general valve modelling can be found in [Merritt, 1967].

Compared to other similar valve solutions, such as poppet valves utilizing follow-up mechanisms, the Valvistor valve has the advantage of high loop gain in the inner hydraulic control loop. This feature is enabled by the characteristic variable slot orifice in the surface area of the poppet itself.

4.1.2 Bi-directional Valvistor

To make the Valvistor valve suitable for the kinds of system described in this thesis it has to be proportionally controlled in both flow directions.

By merging the A- and B-types, figure 4.2, and adding check valve mechanisms in the main poppet that connect the port with highest pressure to the control chamber, and also merge the pilot circuits from both A- and B-types, the Valvistor valve turns into a B-type when the pressure drop is positive in the B- to A-port and to an A-type when the pressure drop is positive in the A- to B-port. Pressure compensators are also added at the pilots in figure 4.3.

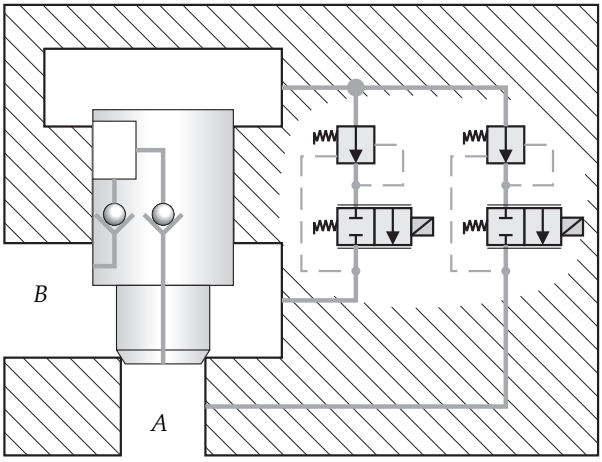

Figure 4.3 *The modified Valvistor valve.*

The valve in figure 4.3 is a bi-directional, proportional flow controlled poppet valve. The valve has another attractive feature as well: there are two

parallel pilot valves. The left one in figure 4.3 is used to control flow in the A to B direction. The other one is used to control flow from B to A. If the pressure is higher at B than at A and the left pilot is used no flow will occur and vice versa. As a consequence; no flow will ever occur in undesired direction, such as a falling load.

Let us look at an example where a high pressure is present at the B-port and the pressure at the A-port is lower. If the right-hand side pilot valve in figure 4.3 is actuated a flow will occur over the poppet from the B- to the A-port. The left check valve in the poppet will be held open at the same time as the right one will remain closed. If the left pilot valve is actuated instead, the check valves in the poppet will remain the same, but the opening of the left pilot valve will not change anything. It will just connect the B-port to the control chamber in the same way as the channel in the poppet already does. This feature is usable in a system to prevent, for example, falling loads because flow in undesired directions will not be present.

The orientation of the bi-directional Valvistor valve also has to be considered. The leakage is different in the different flow directions. In the flow direction B to A in figure 4.3 the valve is almost leakage-free. The pressure is higher at B than at A; the pressure at B is then connected to the chamber above the poppet. Since there is no pressure drop over the leakage path around the poppet there is no leakage flow. However, in the other flow direction, from A to B, the pressure drop over the poppet surface will be the pressure difference between the A port and B port pressures and leakage will occur.

The valve in figure 4.3 can be described schematically by the valve symbol in figure 4.4.

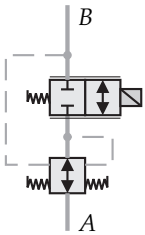

Figure 4.4 *Schematic view of the modified Valvistor valve.*

4.1.3 Measurement on the pressure compensated Valvistor

As proof of concept, measurements at the pressure compensated Valvistor has been performed. The results are shown in figure 4.5. The hardware layout is designed as in figure 4.3 in addition to there only being one pilot circuit present in the used prototype.

The agreement of the measurements and the calculations are rather good, except from the points at high flow and low pressure drop. This can partly be described by that the effective pressurized area of the poppet are less well defined and tends to be larger at large openings of the poppet. The opening of the poppet is as biggest at large flows and small pressure drops. The prototype valve is by no means optimised.

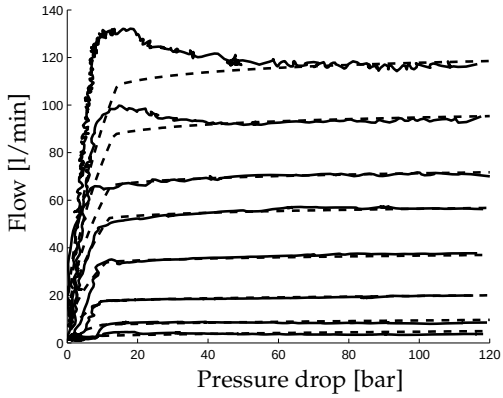

Figure 4.5 *Measurements at the compensated Valvistor valve compared with a nonlinear static model.*

4.2 Novel bi-directional compensator

New modern fluid power systems tend to be more flexible. In systems that deal with regeneration and recuperation the flow directions have to change during operation. The author has proposed a pressure compensator suitable for systems where a bi-directional pressure compensated flow is needed (figure 4.6), patent pending. The proposed compensator can be used in the system described in chapter 3. It is there used to compensate the main flow in a valve, which can be a Valvistor valve or some other valve as shown in figure 4.8. The property of avoiding flow in an undesired flow direction is then still present since the Valvistor is used. Otherwise, to keep this property, the arrangement needs two parallel valves with check valves that handle full flow, see figure 4.7

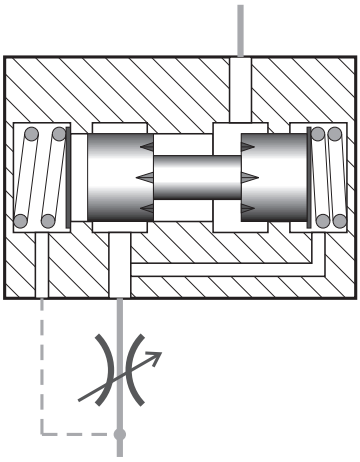

4.6(a) Design with two springs, one for each flow direction.

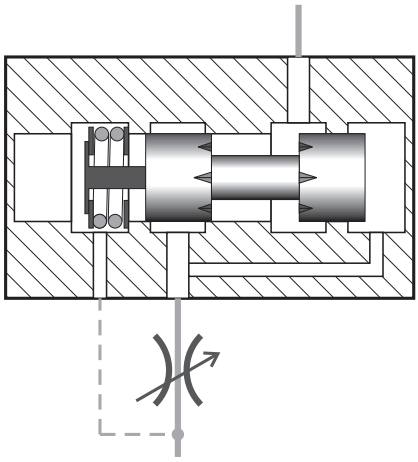

4.6(b) Design with one common spring.

Figure 4.6 *The novel bi-directional pressure compensator suitable in flexible systems.*

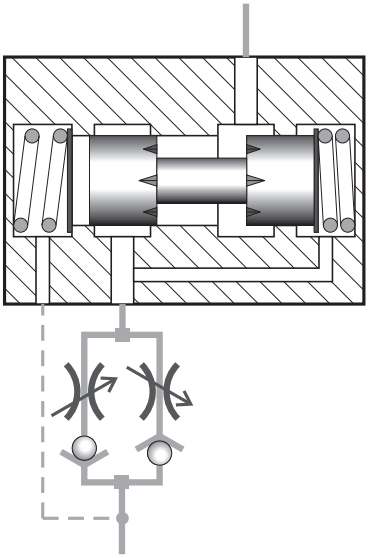

Figure 4.7 *The novel bi-directional pressure compensator together with two full flow valves.*

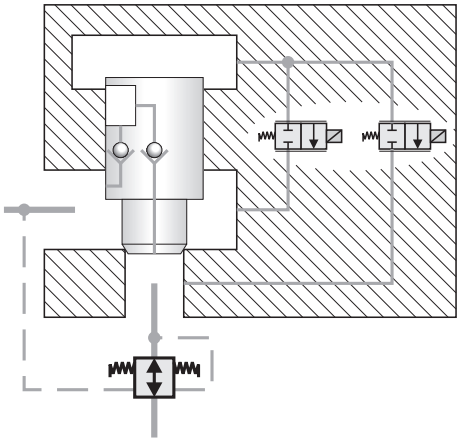

Figure 4.8 *The novel bi-directional pressure compensator together with a bi-directional non-pressure compensated Valvistor valve.*

Some pros and cons of the design in figure 4.8 compared to the valve design described in section 4.1.2 are listed below.

+ No issue due to the nonlinearity[1] in the flow gain described in [III]
+ Only half as many pressure compensators needed in the system, also half as many spool position sensors needed
- Larger pressure compensator components since it is acts on the main flow
- The complete valve will not be modular in the same manner as with the pressure compensator in the pilot circuit, the pressure compensator flow capacity has to follow the flow capacity of the main flow.

[1]Since when pressure compensation is implemented in the pilot circuit the flow gain of the Valvistor has to be pressure independent, otherwise the main stage tends to be overcompensated.

5

Wheel loader application

In this research project the wheel loader application is an important application. The potential efficiency improvement from changing the system layout can roughly be determined by backward calculation from the load pressures and piston speeds.

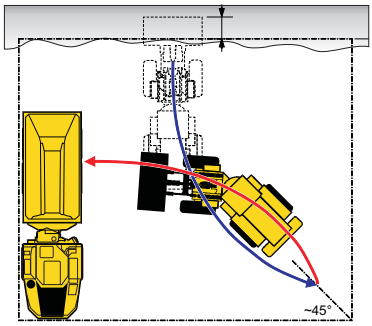

5.1(a) Path of the wheel loader during a short loading cycle.

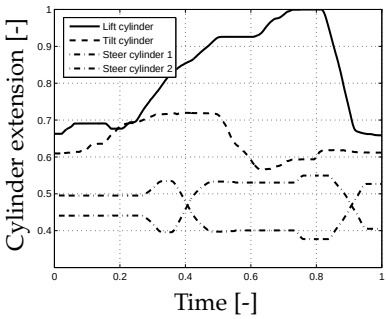

5.1(b) Normalized cylinder extension during a short loading cycle.

Figure 5.1 *The short loading cycle [Filla and Palmberg, 2003] in [Filla, 2005].*

The energy study in this work was conducted using measurements of a typical working cycle, a so-called short working cycle, see figure 5.1.

The mechanical power that is needed to perform this cycle is the force multiplied by the speed of the load. The force can be estimated approximately by measuring the pressures in the cylinders; then, if the friction is ignored, the force is given by the pressures multiplied by the areas of the cylinder. The flow is then estimated by measuring the speed of the cylinders, ignoring the

leakage. The flows in and out of the cylinder are given by the speed multiplied by the areas of the cylinder. The power needed is then approximately the force multiplied by the speed of each cylinder.

In this particular study the working hydraulics are studied. This concerns the boom cylinders, the tilt cylinder and the steering cylinders. The presented figures are thus not valid for a whole vehicle, only the working hydraulics subsystem.

5.1 Calculation cases

This section describes the different cases used when the energy consumption of the short working cycle was calculated. All calculations in this section are only rough estimations, but they give a good overall picture of the difference between the working hydraulics configurations in respect of energy consumption.

5.1.1 Case 1

This case represents the minimal energy consumption that is possible to achieve. Only pure mechanical energy is considered.

This corresponds to a hydraulic system with an efficiency of 100%. There are no throttling losses in the system. It is possible to store energy over time. This system has to contain some kind of ideal accumulator.

5.1.2 Case 2

Here it is assumed that the system cannot assimilate energy over time. This means, roughly, that the system does not contain any accumulators, but that flow can be transferred between cylinders instantaneously. There are still no throttling losses in the system. Otherwise, conditions are the same as in the first case.

5.1.3 Case 3

This corresponds to the system of today. Here, the system pressure is assumed to be equal to the LS-pressure, which is the highest sensed load pressure.

5.1.4 Case 4

The last case studied is when introducing independent meter-in and meter-out orifices in the valves. The LS-pressure is calculated as in the last section. There are two main reasons why this system can save a considerable amount of energy using these kinds of valves. These are the opportunity to use

Differential mode When dealing with small partial loads it is possible to minimize the pressure drop over a cylinder by directly connecting both cylinder chambers to the high pressure line. This is called differential mode.

Floating mode When dealing with lowering loads it is possible to minimize the pressure drop over a cylinder by using the floating mode, which is when the cylinder chambers are directly connected to the tank line.

5.2 Energy efficiency comparison of the different system layouts

The results of the calculations described above are shown in table 5.1 and figure 5.2. In table 5.1 the normalized consumed energy is shown for the four different cases.

Table 5.1 *Calculated normalized energy consumption during the short loading cycle.*

	Case 1	Case 2	Case 3	Case 4
Lift	0.48	0.70	1.00	0.75
Tilt	0.15	0.42	1.00	0.68
Steer	0.40	0.40	1.00	0.96
Total	**0.37**	**0.60**	**1.00**	**0.74**

The calculations suggest that there exists good potential to reduce the energy consumption of the working hydraulics in a modern wheel loader. By introducing the split spool concept, case 4, there is an energy reduction of about 25%. This is a high figure considering the low cost of implementation compared to other solutions.

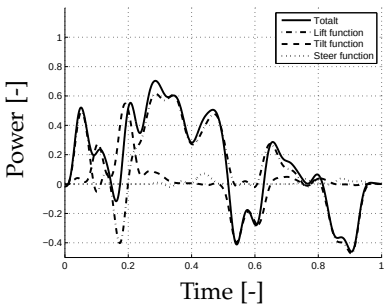

5.2(a) Case 1.

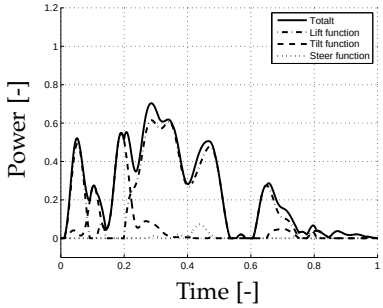

5.2(b) Case 2.

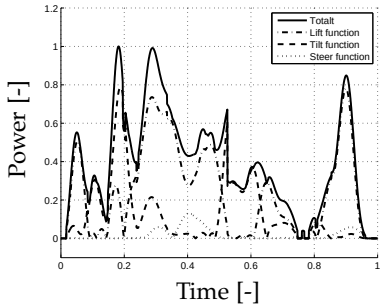

5.2(c) Case 3.

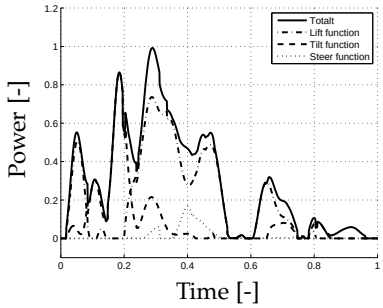

5.2(d) Case 4.

Figure 5.2 *Normalized power consumption during the short loading cycle in the different cases.*

6

Forwarder application – A demonstrator

A PROOF OF CONCEPT WAS performed at Parker Hannifin AB. The control strategy described in chapter 3 is implementation in a real-world application, a forwarder machine. Fast spool valves are used to emulate the valves in a final system.

6.1 Hardware

One function in a forwarder is replaced with individual metering valves, figure 6.1. The jib function is chosen in this case. Parker Hannifin DFplus® "voice coil" valves with additional pressure compensators are used to emulate the modified Valvistor valve concept. LVDT sensors are used to determine the position of the spools in the compensators. The demonstrator is shown in figure 6.1.

6.2 Software

The controller is implemented in a digital real-time system.

The positions of the compensator spools in the valves are measured and fed into the software. The controller laws follow the ideas according to the state machine shown in figure 3.6 in chapter 3. The pump is controlled at a constant pressure. The pressure level of the pump is set at a level to be able to illustrate interesting operation conditions, e.g. operation case and mode switches.

Figure 6.1 *The demonstrator forwarder.*

6.3 Measurements

During the test motion the jib cylinder first extends from its inner position to its outer position, from time 5s to 30s in figure 6.2. Then it retracts and perform the opposite motion, from its outer position to its inner position, 30s to 50s.

The motion from 30s to 50s is similar to the one described in section 3.4. The operation cases during the test motion are shown in figure 6.2(e). The pump pressure is set at an constant pressure in the same manner as in the example in section 3.4.

At 14s a suspicious change of speed can be observed. This is because the area ratio was not concerned correctly in the implementation. Constant flow rather the constant speed was demanded when the system switched from meter-out to meter-in mode. It does not change the significance of the measurements, it can be regarded as a step in the reference signal at the time 14s.

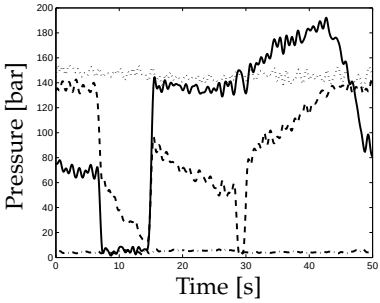

6.2(a) Pressures during the motion, pump pressure (dotted), tank pressure (dash-dotted), A-chamber pressure (dashed), B-chamber pressure (solid).

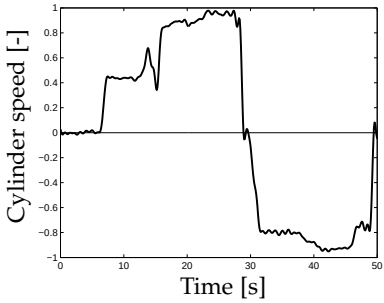

6.2(b) Normalized speed of the cylinder during the motion, negative speed means a retraction of the cylinder.

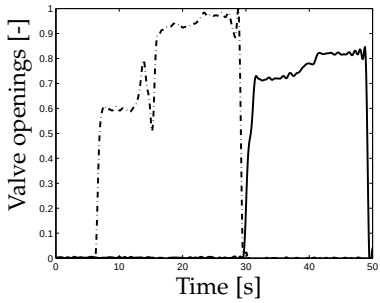

6.2(c) Valve openings of the valves connected to the A-chamber, valve from pump line to chamber (solid), valve from chamber to pump line (dashed), valve from chamber to tank (dash-dotted).

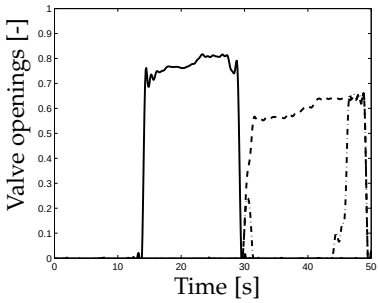

6.2(d) Valve openings of the valves connected to the B-chamber, valve from pump line to chamber (solid), valve from chamber to pump line (dashed), valve from chamber to tank (dash-dotted).

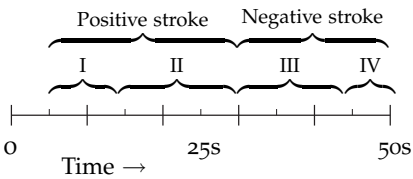

6.2(e) I – floating operation, II – normal operation, III – regenerative operation, IV – normal operation.

Figure 6.2 *Measurement results from the demonstrator. The jib cylinder extends between 5s and 30s, then the cylinder is stopped and retracts between 30s and 50s.*

7

Results and conclusions

In this work a novel system with the aim of reducing energy consumption has been proposed, see chapter 3. The components, namely the valves, have also been developed, see chapter 4.

The new valve is a further development of the Valvistor valve. The Valvistor valve is dynamically modelled and a linear analytical analysis provides the guiding principles of the design. The dynamical properties from the linear analysis are experimentally verified, see [II].

In the project the Valvistor has been made bi-directional and pressure compensated in the pilot circuit. To guarantee the stability of the Valvistor valve a certain amount of damping is needed. The natural way of achieving this is to introduce an underlap of the slot in the main poppet. This underlap introduces nonlinearity in the flow gain. This issue is also dealt with in this work. The valve is experimentally verified, see section 4.1.3.

The novel system reduces energy consumption by reducing throttling losses as well as using the energy stored in certain loads, e.g. hanging masses. By choosing control signals in a certain way, see chapter 3, the mode switches and pump control can be performed with only simple position sensors at the compensator spools. The system can be fully operated in a less energy efficient way without sensor signals. The system is therefore not fully dependent on the sensors. There is functionality built-in in the hardware that avoids flows in undesired flow directions. A sensor failure is not safety critical and is thus not a security issue to the same extent as in other sensor-dense systems. The control principle is also experimentally verified, see section 6.3. Since the system is able to operate in regenerative and floating operation, see chapter 3, it is possible to increase the actuation speed capacity of small loads if necessary.

This valve concept is suitable for mass production since the same pilot

circuits can be used for most sizes of the main poppet. Only the gain of the Valvistor element has to be changed. For a certain pilot in a valve designed for low flow range the gain is relatively low which at the same time means relatively high break frequency. The same pilot can be used for a high flow range valve. The gain is then relatively high and as a resulting effect the break frequency is relatively low. See for example paper [II] for the relation between gain and bandwidth. This is in the same direction as many systems demand; low flow often demands high dynamic performance from the valves and vice versa. The product family can thus be made modular.

The proposed valve is in practice leakage-free in one direction. Other properties are ideally the same in both directions. Consequently, the orientations of the valves are chosen so that heavy loads do not sink in the case of closed valves.

The area of individually controlled meter-in and meter-out systems has been a research area for a long time. It seems that it is now ready for the market.

8
Outlook

The focus on energy efficiency will most certainly continue even in the future, at least for a while. It is, however, important to keep in mind that in systems that operates with a very low intermittence factor there are other sub systems working more frequently that are more meaningful to optimise.

The work of energy efficiency improvement can be divided into three different steps:

1. Reduce losses, e.g. throttling losses.
2. Take advantage of energy stored in loads by running the pump as a motor. Energy can then be used either in other subsystems e.g. the transmission, or it can be used in an electrical generator in a hybrid system.
3. Store the energy direct hydraulically, e.g. in a accumulator.

The system proposed in this thesis can be combined directly, without modification, with the two first ones. The third one has to be studied in detail in the future.

The pump control can be studied in greater detail and there are probably other solutions that are more energy efficient. One example is that there are cases when it may be preferable from an energy consumption point of view to let the pump be controlled by a differentially operated load.

9

Review of papers

In this section, the three appended papers in the thesis are briefly summarized.

Paper I

Study on Individual Pressure Control in Energy Efficient Cylinder Drives

This paper deals with physical decoupling. The idea is to decouple the chamber pressures in a cylinder drive by using independent metering valves. The chamber pressures can then be substituted by the cylinder speed and, for example, a "mean pressure". Benefits and drawbacks are pointed out. For example, the cylinder speed and chamber pressures in the cylinder have to be measured.

Paper II

The Dynamic Properties of a Poppet Type Hydraulic Flow Amplifier

The dynamic properties of the Valvistor valve are analytically described in this paper. The paper starts with a complete complex valve model that is narrowed down to a simplified model. The dominating frequencies are also related in a somewhat normalized fashion to, for example, material and geometrical properties of the poppet itself.

Paper III

A Novel Valve Concept Including the Valvistor Poppet Valve

A novel design of the pilot circuit in the Valvistor valve, suitable for independent metering systems, is presented in this paper. The design allow flows in both directions; the valve is bi-directional. It also prevents flow in undesired flow directions. The valve is pressure compensated in both directions.

References

[Achten, 2007] Achten P.A.J. "Changing the paradigm." In *The Tenth Scandinavian International Conference on Fluid Power, Tampere, Finland*. 2007.

[Achten et al., 1997] Achten P.A.J., Fu Z., and Vael G.E.M. "Transforming future hydraulics: a new design of a hydraulic transformer." In *Proc. SICFP'97, Linköping, Sweden*. 1997.

[Andersson, 1984] Andersson B.R. *On the Valvistor, a proportionally controlled seat valve*. Ph.D. thesis, LiTH, 1984. ISBN 91-7372-748-2.

[Backé, 1974] Backé W. *Systematik der hydraulischen Widerstandsschaltungen in Ventilen und Regelkreisen*. Otto Krausskopf–Verlag GmbH, Mainz, 1974.

[Elfving, 1997] Elfving M. "On fluid power control, a concept for a distributed controller of fluid power actuators." Lic. thesis, 1997. LiTH.

[Elfving and Palmberg, 1996] Elfving M. and Palmberg J.-O. "Distributed control of fluid power actuators –decoupled chamber pressure controlled cylinder." In *The 9th Bath International Fluid Power Workshop*. 1996. LiTH.

[Eriksson, 1996] Eriksson B. "Optimal force control to improve hydraulic drives." Lic. thesis, 1996. KTH, ISSN 1400-1179.

[Filla, 2005] Filla R. "Operator and machine models for dynamic simulation of construction machinery." Lic. thesis, 2005. LiTH.

[Filla and Palmberg, 2003] Filla R. and Palmberg J.-O. "Using dynamic simulation in the development of construction machinery." In *The 8th Scandinavian International Conference on Fluid Power*, vol. 1, pp. 651–667. 2003. LiTH.

[Jansson, 1994] Jansson A. *Fluid Power System Design - A Simulation Approach*. Ph.D. thesis, LiTH, 1994.

[Jansson et al., 1991] Jansson A., Krus P., and Palmberg J.-O. "Decoupling of response and pressure level in a hydraulic actuator." In *The 4th Bath International Fluid Power Workshop*. 1991.

[Krus, 1988] Krus P. *On Load Sensing Fluid Power Systems - With Special Reference to Dynamic Properties and Control Aspects*. Ph.D. thesis, LiTH, 1988.

[Krus et al., 1987] Krus P., Persson T., and Palmberg J.-O. "Dynamic properties of load sensing systems." In *International Conference on Fluid Power, Tampere, Finland*. 1987.

[Linjama et al., 2007] Linjama M., Houva M., and Vilenius M. "On stabillity and dynamic characteristics of hydraulic drives with distributed valves." In D.N. Johnston and A.R. Plummer, eds., *Power Transmission and Motion Control 2007*. 2007.

[Linjama et al., 2003] Linjama M., Laamanen A., and Vilenius M. "Is it time for digital hydraulics?" In *The Eight Scandinavian International Conference on Fluid Power, Tampere, Finland*. 2003.

[Merritt, 1967] Merritt H.E. *Hydraulic Control Systems*. John Wiley & sons, Inc., 1967.

[Monsun-Tison, 1978] Monsun-Tison. "Product information." 1978.

[Palmgren, 1988] Palmgren G. "On secondary controlled hydraulic systems." Lic. thesis, 1988. LiTH.

[Palmgren and Rydberg, 1987] Palmgren G. and Rydberg K.-E. "Secondary controlled hydraulic systems - energy aspects and control strategies." In *International Conference on Fluid Power, Tampere, Finland*. 1987. LiTH.

[Pettersson, 2002] Pettersson H. *On Valve Controlled Fluid Power Systems Flow Amplifier and Percussive Rock Drilling*. Ph.D. thesis, LiTH, 2002. ISBN: 91-7373-404-7.

[Pettersson and Palmberg, 1999] Pettersson H. and Palmberg J.-O. "High bandwidth flow amplifier. a design and concept study." In *The 6th Scandinavian International Conference on Fluid Power*. 1999.

[Pfaff, 2005] Pfaff J.L. "Distributed electro-hydraulic systems for telehandlers." In *2005 National Conference on Fluid Power*. IFPE, 2005.

[Rahmfeld and Ivantysynova, 2001] Rahmfeld R. and Ivantysynova M. "Displacement controlled linear actuator with differential cylinder-a way to save primary energy in mobile machines." In *Fifth International Conference on Fluid Power Transmission and Control (ICFP)*, vol. 1, pp. 316–322. 2001.

[Raymond and Chenoweth, 1993] Raymond E.T. and Chenoweth C.C. *Aircraft Flight Control Actuation System Design*. Society of Automotive Engineers, Inc., 1993. ISBN: 1–56091–376–2.

[Shenouda, 2006] Shenouda A. *Quasi-Static Hydraulic Control Systems and Energy Savings Potential Using Independent Metering Four-Valve Assembly Configuration*. Ph.D. thesis, Georgia Institute of Technology, 2006.

[Shenouda and Book, 2005] Shenouda A. and Book W. "Energy saving analysis using a four-valve independent metering configuration controlling a hydraulic cylinder." In *2005 SAE Commercial Vehicle Engineering Conference, November 2005, Rosemont, IL, USA, Session: Simulation and Optimization Part 1 of 3: System Level*. SAE, 2005.

[Stephenson, 2001] Stephenson D. "Hydraulic system with shadow poppet valve." Patent, 2001. US6330798.

[Tabor, 2005] Tabor K.A. "A novel method of controlling a hydraulic actuator with four valve independent metering using load feedback." In *Simulation and Optimization: System Level, Component Level, Advanced Technology/Methodology*, 978-0-7680-1700-7. SAE, 2005.

[Turner and Lakin, 1997] Turner S.B. and Lakin D.F. "Electrohydraulic proportional control valve assemblies." Patent, 1997. EP0809737.

[Yuan and Lew, 2005] Yuan Q. and Lew J. "Modeling and control of two stage twin spool servo-valve for energy-saving." In *American Control Conference, 2005. Proceedings of the 2005*, vol. 6, pp. 4363–4368. 2005. ISSN 0743-1619. doi:10.1109/ACC.2005.1470666.

[Yuan et al., 2006] Yuan Q., Schottler C., and Y.Lew J. "Electronic flow control valve (efcv) with pressure compensation capabillity." In *Fifth International Fluid Power Conference, Aachen, Germany*. 2006.