Linköping studies in science and technology. Thesis.
No. 1512

# Topics in Robustness Analysis

**Sina Khoshfetrat Pakazad**

REGLERTEKNIK
AUTOMATIC CONTROL
LINKÖPING

Division of Automatic Control
Department of Electrical Engineering
Linköping University, SE-581 83 Linköping, Sweden
http://www.control.isy.liu.se
sina.kh.pa@isy.liu.se

Linköping 2011

This is a Swedish Licentiate's Thesis.

Swedish postgraduate education leads to a Doctor's degree and/or a Licentiate's degree.
A Doctor's Degree comprises 240 ECTS credits (4 years of full-time studies).
A Licentiate's degree comprises 120 ECTS credits,
of which at least 60 ECTS credits constitute a Licentiate's thesis.

Linköping studies in science and technology. Thesis.
No. 1512

**Topics in Robustness Analysis**

Sina Khoshfetrat Pakazad

*sina.kh.pa@isy.liu.se*
*www.control.isy.liu.se*
*Department of Electrical Engineering*
*Linköping University*
*SE-581 83 Linköping*
*Sweden*

ISBN 978-91-7393-014-7 ISSN 0280-7971 LiU-TEK-LIC-2011:51

Copyright © 2011 Sina Khoshfetrat Pakazad

Printed by LiU-Tryck, Linköping, Sweden 2011

*To My Parents and Brothers*

# Abstract

In this thesis, we investigate two problems in robustness analysis of uncertain systems with structured uncertainty. The first problem concerns the robust finite frequency range $\mathcal{H}_2$ analysis of such systems. Classical robust $\mathcal{H}_2$ analysis methods are based on upper bounds for the robust $\mathcal{H}_2$ norm of a system which are computed over the whole frequency range. These bounds can be overly conservative, and therefore, classical robust $\mathcal{H}_2$ analysis methods can produce misleading results for finite frequency range analysis. In the first paper in the thesis, we address this issue by providing two methods for computing upper bounds for the robust finite-frequency $\mathcal{H}_2$ norm of the system. These methods utilize finite-frequency Gramians and frequency partitioning to calculate upper bounds for the robust finite-frequency $\mathcal{H}_2$ norm of uncertain systems with structured uncertainty. We show the effectiveness of these algorithms using both theoretical and practical experiments.

The second problem considered in this thesis is on distributed robust stability analysis of interconnected uncertain systems with structured uncertainty. Distributed analysis methods are useful when a centralized solution for the problem is not possible, which can be due to computational or structural constraints in the problem. Under this topic, we study robust stability analysis of large scale weakly interconnected systems using the so-called $\mu$-analysis method, which involves solving convex feasibility problems. By exploiting the structure imposed by the interconnection of subsystems, these feasibility problems can be decomposed into smaller and simpler problems that are coupled. We propose tailored projection-based methods for solving the resulting convex feasibility problems, and we discuss how these algorithms can be implemented in a distributed manner. Finally, our numerical results show that these methods outperform the conventional projection-based algorithms for such problems.

# Populärvetenskaplig sammanfattning

Många modellbaserade metoder för att designa regulatorer tar inte hänsyn till felaktigheter i de givna modellerna i designprocessen. Det är därför viktigt att kontrollera stabilitet och prestanda med hänsyn till dessa potentiella brister som kan finnas i modellen, till exempel osäkerhet i modellparametrar. I denna avhandling studerar vi hur modellosäkerheter vid designen av regulatorn kan påverka stabiliteten och prestandan för det slutna systemet. Detta kallas robusthetsanalys. I detta avhandling kommer vi att fokusera pårobusthetsanalys för ett begränsat frekvensintervall samt distribuerad robust stabilitetsanalys av sammanlänkade osäkra system.

Vikten av metoder för robusthetsanalys för begränsade frekvensintervall blir uppenbar när klassiska metoder för oändliga frekvensintervall ger alltför konservativa resultat. I denna avhandling presenterar vi robusthetsanalysmetoder för begränsade frekvensintervall för modeller med osäkerheter och visar att dessa förbättrar resultaten i jämförelse med de klassiska metoderna.

Robust stabilitetsanalys för sammanlänkade system dyker upp i många tillämpningar, till exempel smarta elnät, partiella differentialekvationer etc. För dessa problem kan det, pågrund av storleken eller strukturella begränsningar, vara svårt eller olämpligt att utföra robust stabilitetsanalys centraliserat. För att, till viss del, komma runt detta kan man använda en distribuerad metod. I denna avhandling visar vi hur man kan utnyttja strukturen påkopplingarna mellan systemen för att dela upp problemet, och vi ger en distribuerad algoritm för att lösa det.

# Acknowledgments

First and foremost I would like to thank my supervisor Prof. Anders Hansson, for his persistent guidance, contribution, inspiration and remarkable patience throughout the process leading to this thesis. I am truly grateful. I am also very thankful for the additional support and guidance that I received from my co-supervisors, Prof. Torkel Glad and Dr. Anders Helmersson.

Thank you Prof. Lennart Ljung for granting me the possibility to be a member of the impressive Automatic Control group in Linköping, which I am sure will continue to be under the passionate guidance of Prof. Svante Gunnarsson as the newly appointed head of the devision. My gratitude extends to Ninna Stensgård and her predecessors Åsa Karmelind and Ulla Salaneck for their constant support and help through these years.

Special thanks goes to Dr. Daniel Ankelhed, Lic. Daniel Petersson and Dr. Matrin S. Andersen for their very constructive comments and much needed help to finish this thesis.

I thank all the extraordinary people in the Automatic Control department for providing such warm and friendly environment. Thank you Lic.[1] André Carvalho Bittencourt, Dr. Daniel Ankelhed, Dr. Emre Özkan, Lic. Fredrik Lindsten, Dr. Henrik Ohlsson, Lic. Zoran Sjanic, Lic.[1] Patrik Axelsson and Ylva Jung for being such great friends, remarkable travel companions and endless sources of fun and energy. Also I extend my gratitude to Amin Shahrestani Azar, Behbood Borghei, Farham Farhangi, Farzad Irani, Roozbeh Kianfar and Shirin Katoozi for their support through all the good and not so good times. I really cherish your friendship.

I would like to take this opportunity to also thank my mom and dad for always being there for me and supporting me all the way to this point. You have always been a source of inspiration to me and always will be. Also I am indebted to my brothers, Soheil and Saeed, for always encouraging and helping me through all my endeavors in my life.

Finally, for financial support, I would like to thank the European Commission under contract number AST5-CT-2006-030768-COFCLUO and Swedish government under the ELLIIT project, the strategic area for ICT research.

*Linköping, November 2011*
***Sina Khoshfetrat Pakazad***

[1] Soon to be.

# Contents

**Notation** **xv**

## I Background

**1 Introduction** **3**
1.1 Motivation . . . 3
1.2 Publications and Contributions . . . 4
1.3 Thesis Outline . . . 5

**2 Optimization** **7**
2.1 General Description . . . 7
2.2 Convex Optimization . . . 8
2.2.1 Convex sets . . . 8
2.2.2 Convex functions . . . 8
2.2.3 Definition of a convex optimization problem . . . 9
2.2.4 Generalized inequalities . . . 10
2.2.5 Semidefinite programming . . . 10
2.3 Primal and Dual Problems . . . 11
2.4 Decomposition Methods . . . 12
2.4.1 Primal decomposition . . . 12
2.4.2 Dual decomposition . . . 13
2.5 Matrix Sparsity . . . 14
2.5.1 Possibilities in sparsity in semidefinite programming . . . 15

**3 Uncertain Systems and Robustness Analysis** **17**
3.1 Linear Systems . . . 17
3.1.1 Continuous time systems . . . 17
3.1.2 $\mathcal{H}_\infty$ and $\mathcal{H}_2$ norms . . . 18
3.2 Uncertain Systems . . . 19
3.2.1 Structured uncertainties and LFT representation . . . 19
3.2.2 Robust $\mathcal{H}_\infty$ and $\mathcal{H}_2$ norms . . . 20
3.2.3 Nominal and robust stability and performance . . . 20

3.3 $\mu$-Analysis . . . . . 21
3.3.1 Structured singular values . . . . . 21
3.3.2 Structured robust stability and performance analysis . . . . 22

**Bibliography** **25**

# II Publications

**A Robust Finite-Frequency $\mathcal{H}_2$ Analysis of Uncertain Systems** **31**
1 Introduction . . . . . 33
1.1 Notation . . . . . 34
2 Problem formulation . . . . . 35
2.1 $\mathcal{H}_2$ norm of a system . . . . . 35
2.2 Robust $\mathcal{H}_2$ norm of a system . . . . . 35
3 Mathematical preliminaries . . . . . 37
3.1 Finite-frequency observability Gramian . . . . . 37
3.2 An upper bound on the robust $\mathcal{H}_2$ norm . . . . . 38
4 Gramian-based upper bound on the robust finite-frequency $\mathcal{H}_2$ norm . . . . . 43
5 Frequency gridding based upper bound on the robust finite-frequency $\mathcal{H}_2$ norm . . . . . 43
6 Numerical examples . . . . . 47
6.1 Theoretical Example . . . . . 47
6.2 Comfort Analysis Application . . . . . 51
7 Discussion and General remarks . . . . . 54
7.1 The observability Gramian based method . . . . . 54
7.2 The frequency gridding based method . . . . . 54
8 Conclusion . . . . . 55
A Appendix . . . . . 55
A.1 Proof of Lemma 2 . . . . . 55
A.2 Proof of Theorem 1 . . . . . 56
A.3 Proof of Theorem 3 . . . . . 56
A.4 Proof of Theorem 4 . . . . . 57
Bibliography . . . . . 58

**B Decomposition and Projection Methods for Distributed Robustness Analysis of Interconnected Uncertain Systems** **61**
1 Introduction . . . . . 63
2 Decomposition and projection methods . . . . . 66
2.1 Decomposition and convex feasibility in product space . . 66
2.2 Von Neumann's alternating projection in product space . . 67
2.3 Convergence . . . . . 67
3 Convex minimization reformulation . . . . . 68
3.1 Solution via Alternating Direction Method of Multipliers . 69
4 Distributed implementation . . . . . 71
4.1 Feasibility Detection . . . . . 71

4.2 Infeasibility Detection . . . . . 73
5 Robust Stability Analysis . . . . . 74
6 Numerical Results . . . . . 77
7 Conclusion . . . . . 79
Bibliography . . . . . 83

# Notation

## Used Notations

| Notation | Meaning |
|---|---|
| $\mathbb{N}$ | Set of natural numbers |
| $\mathbb{R}^n$ | Set of $n$-dimensional real vectors |
| $\mathbb{R}^n_+$ | Set of $n$-dimensional positive real vectors |
| $\mathbb{C}^n$ | Set of $n$-dimensional complex vectors |
| $\mathbb{S}^n$ | Set of $n \times n$ symmetric matrices |
| $\mathbb{S}^n_+$ | Set of $n \times n$ symmetric positive semi definite matrices |
| $\operatorname{dom} f$ | Domain of $f$ |
| $\operatorname{int} S$ | Interior of $S$ |
| $A'$ | Transpose of matrix $A$ |
| $A^*$ | Conjugate transpose of matrix $A$ |

# Part I

# Background

# 1

# Introduction

## 1.1 Motivation

Many control design methods are model driven, e.g., [Glad and Ljung, 2000, Bequette, 2003, Åström and Wittenmark, 1990, Åström and Hägglund, 1995], and as a result, stability and performance provided by controllers designed using such methods are affected by the quality of the models. One of the major issues with models is their uncertainty, and some of the model-based design methods take this uncertainty into consideration, e.g., see [Zhou and Doyle, 1998, Skogestad and Postlethwaite, 2007, Zhou et al., 1997, Doyle et al., 1989]. However, many of the model based design methods, specially the ones employed in industry, neglect the model uncertainty. Hence, it is important to address how model uncertainty tampers with the performance or stability of the closed loop system. To be more precise, it is essential to check whether there is any chance for the closed loop system, under the designed controller, to lose stability or desired performance under any *possible* uncertainty. This type of analysis is called robustness analysis and is extremely important in applications where the margin for errors is very small, e.g., flight control design.

Analysis and control of high dimensional and large scale interconnected systems have been of interest in the field of automatic control, e.g., see [Papachristodoulou and Peet, 2006, Mbarushimana and Xin, 2011, Zhou et al., 2010]. Robustness analysis of such systems pose different challenges. These can be purely computational or due to structural constraints in the problem. Computational challenges can, for instance, appear in the analysis of systems with large state dimension, as in the analysis of spatially discretized partial differential equations, e.g., see [Krstic, 2009, Papachristodoulou and Peet, 2006]. Also as examples for complicating structural constraints one can point to physical separation or privacy re-

quirement over a network, e.g., see [Budka et al., 2010, Zhou et al., 2010]. These challenges can be addressed, to some extent, by devising distributed robustness analysis algorithms which provide the possibility of solving the analysis problem over a network of agents. By this, we distribute the computational burden over the network and can satisfy underlying structural requirements in the problem, such as privacy.

Motivated by this, robustness analysis is the main subject of this thesis, and specifically the following topics are addressed in the thesis.

- *Robust finite-frequency $\mathcal{H}_2$ analysis of uncertain systems.*

  In contrast to conventional robustness analysis methods where the whole frequency range is considered, we here investigate the problem of robustness analysis over a finite frequency range. For instance, this can be relevant either due to the fact that the system operates within certain frequency intervals, or due to the fact that the provided models are only valid up to a certain frequency. In either case, performing the analysis over the whole frequency range may result in misleading conclusions. For example, this was the case for the model provided by AIRBUS in [Garulli et al., 2011]. By analyzing this model unexplainable peaks were observed in the frequency response of the model, above the frequency of 15 rad/s, which were not present in the actual physical system. As a result, the model was deemed to be valid only for frequencies up to 15 rad/s.

- *Distributed robust stability analysis of weakly interconnected uncertain systems.*

  Within this topic we investigate robust stability analysis of a collection of weakly interconnected uncertain systems, and propose computational algorithms for solving this problem in a distributed manner. This approach is relevant in situations where each of the subsystems is reluctant to share sensitive information regarding their models or controllers, but are willing to share certain information for the collective good. Also considering the recent development of multi core and multi processor platforms, these methods can also be employed for distributing the computational burden of robustness analysis of systems with large state dimension, [Krstic, 2009, Papachristodoulou and Peet, 2006].

## 1.2 Publications and Contributions

This thesis is based on the following papers

Paper A

> A. Garulli, A. Hansson, S. Khoshfetrat Pakazad, A. Masi, and R. Wallin. Robust finite-frequency $\mathcal{H}_2$ analysis of uncertain systems. Technical Report LiTH-ISY-R-3011, Department of Electrical Engineering, Linköping University, SE-581 83 Linköping, Sweden, May 2011.

Paper B

> S. Khoshfetrat Pakazad, A. Hansson, M. S. Andersen, and A. Rantzer. Decomposition and projection methods for distributed robustness analysis of interconnected uncertain systems. Technical Report LiTH-ISY-R-3033, Department of Electrical Engineering, Linköping University, SE-581 83 Linköping, Sweden, Nov. 2011.

In paper A we investigate the first topic in Section 1.1 and proposes two algorithms for finite-frequency robustness analysis. This paper was written by the author of the thesis, however, the algorithm labeled *Gramian based* in the paper has been entirely developed by the other authors of the paper, [Masi et al., 2010]. Parts of this paper has also been presented in [Pakazad et al., 2011].

In paper B we propose tailored projection based methods for solving convex feasibility problems where none of the constraints in the problem depend on the whole optimization vector. The proposal of these methods was motivated by the problem of robustness analysis of weakly interconnected uncertain systems.

The following publication by the author of this thesis has not been included in the thesis.

> R. Wallin, S. Khoshfetrat Pakazad, A. Hansson, A. Garulli, and A. Masi. *Optimization Based Clearance of Flight Control Laws , Ch. Applications of IQC based analysis techniques for clearance*. Springer, 2011.

## 1.3 Thesis Outline

The thesis consists of two main parts. Part I covers the theoretical background, with Chapter 2 reviewing some basic definitions and concepts in optimization and Chapter 3 providing some preliminaries on uncertain systems and robustness analysis of uncertain systems with structured uncertainty. Note that the information in Part I is far from the full treatment of any of the mentioned topics. For a more detailed introduction to convex optimization and distributed computing refer to [Boyd and Vandenberghe, 2004, Bertsekas and Tsitsiklis, 1997]. Also for a more complete treatment of uncertain systems and robust control refer to [Skogestad and Postlethwaite, 2007, Zhou et al., 1997]. Finally, Part II consists of papers A and B that discuss the topics presented in Section 1.1.

# 2

# Optimization

Optimization is one of the most important tools in different fields of engineering. In this chapter some of the basic concepts in optimization are reviewed. The outline for this chapter is as follows. First, Section 2.1 describes how to define an optimization problem. Then, Section 2.2 introduces convex optimization problems. Sections 2.3 and 2.4 review the definitions of primal and dual optimization problems and describe some of the basic decomposition methods for these problems, respectively. Section 2.5 concludes the chapter by discussing the definition of sparsity in optimization problems and investigating some of the opportunities made feasible by exploiting this structure in the problem.

## 2.1 General Description

There are different ways of defining an optimization problem. In this thesis and in the appended papers, we consider the following definition of an optimization problem, taken from [Boyd and Vandenberghe, 2004]

$$\begin{array}{ll} \text{minimize} & f_0(x) \\ \text{subject to} & f_i(x) \leq 0, \quad i = 1, \ldots, m, \\ & h_i(x) = 0, \quad i = 1, \ldots, p, \end{array} \tag{2.1}$$

where $f_0(x)$ is the cost function, $f_i(x)$, for $i = 1, \ldots, m$, and $h_i(x)$, for $i = 1, \ldots, p$, are the inequality and equality constraint functions, respectively. The goal is to minimize the cost function while satisfying the constraints in the problem.

Next a class of optimization problems referred to as convex optimization problems is described, and the requirements on the constraints and cost functions for this class of problems are discussed.

## 2.2 Convex Optimization

In order to describe the characteristics of the cost function and constraint functions in a convex optimization problem, we need to define the concept of convexity for sets and functions.

### 2.2.1 Convex sets

This section reviews some definitions on sets, which are essential in the upcoming sections. We start by defining an affine set.

**Definition 2.1 (Affine set, Boyd and Vandenberghe [2004]).** A set $\mathcal{C} \subseteq \mathbb{R}^n$ is *affine* if for any $x_1, x_2 \in \mathcal{C}$,

$$x = \theta x_1 + (1 - \theta) x_2 \in \mathcal{C}, \tag{2.2}$$

for all $\theta \in \mathbb{R}$.

An affine set is a special case of convex sets which are defined as follows.

**Definition 2.2 (Convex set, Boyd and Vandenberghe [2004]).** A set $\mathcal{C} \subseteq \mathbb{R}^n$ is *convex* if for any $x_1, x_2 \in \mathcal{C}$,

$$x = \theta x_1 + (1 - \theta) x_2 \in \mathcal{C}, \tag{2.3}$$

for all $0 \leq \theta \leq 1$.

Another important subclass of convex sets, are convex cones which are defined as below.

**Definition 2.3 (Convex cone, Boyd and Vandenberghe [2004]).** A set $\mathcal{C} \subseteq \mathbb{R}^n$ is a *convex cone* if for any $x_1, x_2 \in \mathcal{C}$,

$$x = \theta_1 x_1 + \theta_2 x_2 \in \mathcal{C}, \tag{2.4}$$

for all $\theta_1, \theta_2 \geq 0$.

Also a convex cone is called proper if

- It contains its boundary.
- It has nonempty interior.
- It does not contain any line.

For instance, the sets $\mathbb{S}^n_+$ and $\mathbb{R}^n_+$ which represent the symmetric positive semidefinite $n \times n$ matrices and positive real $n$ dimensional vectors, respectively, are both proper cones. The next section reviews the definition of convex functions and provides some important examples of this type of functions.

### 2.2.2 Convex functions

The concept of convex functions is fundamental in the definition of convex optimization problems. Definition 2.4, defines this class of functions.

**Definition 2.4 (Convex functions, Boyd and Vandenberghe [2004]).** A function $f : \mathbb{R}^n \mapsto \mathbb{R}$ is convex, if $\operatorname{dom} f$ is convex and for all $x, y \in \operatorname{dom} f$ and $0 \leq \theta \leq 1$,

$$f(\theta x + (1-\theta)y) \leq \theta f(x) + (1-\theta) f(y). \tag{2.5}$$

Also a function is strictly convex if the inequality in (2.5) holds strictly.

Some of the most widely used convex functions in general and in this thesis are listed below

- Affine functions.
- Norms.
- Distance to a convex set.
- Indicator function for convex sets,

where the indicator function for a set $\mathcal{C}$ is defined as

$$g(x) = \begin{cases} \infty & x \notin \mathcal{C} \\ 0 & x \in \mathcal{C} \end{cases} \tag{2.6}$$

Note that convexity of all the functions mentioned above can be established using Definition 2.4.

### 2.2.3 Definition of a convex optimization problem

Having defined convex sets and functions, we can define a convex optimization problem.

**Definition 2.5 (Convex optimization problem, Boyd and Vandenberghe [2004]).** Consider the optimization problem defined in (2.1). If

- $f_0(x)$ is a convex function,
- $f_i(x)$, for $i = 1, \ldots, m$ are all convex functions,
- $h_i(x)$ for $i = 1, \ldots, m$ are all affine functions,

then the optimization problem in (2.1) is a convex optimization problem.

Definition 2.5 is not the only definition for a convex optimization problem, and there are other definitions which only consider the convexity of the cost function and the feasible set as the required conditions for convexity of the problem, e.g., see [Bertsekas, 2009]

If the cost function in the optimization problem in (2.1) is set to zero, or is chosen

to be independent of $x$, then the problem can be viewed as the following problem

$$\begin{aligned} &\text{find} && x \\ &\text{subject to} && f_i(x) \leq 0, \quad i = 1, \dots, m, \\ & && h_i(x) = 0, \quad i = 1, \dots, p. \end{aligned} \tag{2.7}$$

This problem is referred to as a feasibility problem, and correspondingly if the equality and inequality constraint functions in (2.7) satisfy the conditions in Definition 2.5, this problem is referred to as a convex feasibility problem. This type of problems is the topic of one of the papers appended to this thesis, [Khoshfetrat Pakazad et al., 2011].

Another subclass of convex optimization problems, which plays a pivotal role in control, is the SemiDefinite Programming, SDP, problems, [Boyd et al., 1994, Boyd and Vandenberghe, 2004], which will be briefly reviewed in Section 2.2.5.

### 2.2.4 Generalized inequalities

In this section an extension to the notion of inequality is introduced, which is based on the definition of proper cones, [Boyd and Vandenberghe, 2004]. Let $K$ be a proper cone. Then for $x, y \in \mathbb{R}^n$,

$$\begin{aligned} x \preceq_K y &\Leftrightarrow x - y \in K, \\ x \prec_K y &\Leftrightarrow x - y \in \operatorname{int} K. \end{aligned} \tag{2.8}$$

Note that component-wise inequalities and matrix inequalitities are special cases of the inequalities in (2.8). This can be seen by choosing $K$ to be $\mathbb{R}^n_+$ or $\mathbb{S}^n_+$. Definition 2.4 can also be generalized using proper cones. A function $f$ is said to be convex with respect to a proper cone $K$, i.e., $K$-convex, if for all $x, y \in \operatorname{dom} f$ and $0 \leq \theta \leq 1$,

$$f(\theta x + (1-\theta)y) \preceq_K \theta f(x) + (1-\theta) f(y). \tag{2.9}$$

Also, $f$ is strictly $K$-convex if the inequality in (2.9) holds strictly.

### 2.2.5 Semidefinite programming

An SDP problem is a convex optimization problem and is defined as below

$$\begin{aligned} &\underset{x}{\text{minimize}} && c'x \\ &\text{subject to} && F_0 + \sum_{i=1}^{n} x_i F_i \preceq 0, \\ & && Ax = b, \end{aligned} \tag{2.10}$$

where $c \in \mathbb{R}^n$, $x \in \mathbb{R}^n$, $F_i \in \mathbb{S}^m$, for $i = 0, \dots, n$, $A \in \mathbb{R}^{p \times n}$ and $b \in \mathbb{R}^p$. They appear in many problems in automatic control, [Boyd et al., 1994], and are used extensively in the methods presented in this thesis for performing robust finite-

frequency $\mathcal{H}_2$ analysis and distributed robustness analysis. The role of SDP problems in robustness analysis will be described in Chapter 3.

## 2.3 Primal and Dual Problems

Consider the problem in (2.1). The *Lagrangian* function for this problem is defined as

$$L(x, \lambda, v) = f_0(x) + \sum_{i=1}^{m} \lambda_i f_i(x) + \sum_{i=1}^{p} v_i h_i(x), \tag{2.11}$$

where $\lambda = \begin{bmatrix} \lambda_1 & \cdots & \lambda_m \end{bmatrix}' \in \mathbb{R}^m$ and $v = \begin{bmatrix} v_1 & \cdots & v_p \end{bmatrix}' \in \mathbb{R}^p$ are the so called dual variables.

Let the collective domain of the optimization problem in (2.1) be denoted as $D = \cap_{i=0}^{m} \operatorname{dom} f_i \cap_{i=1}^{m} \operatorname{dom} h_i$. Then the corresponding dual function for this problem is defined as

$$g(\lambda, v) = \inf_{x \in D} L(x, \lambda, v). \tag{2.12}$$

Note that for $\lambda \geq 0$ and any feasible solution $\bar{x}$ for the problem in (2.1)

$$f_0(x) \geq L(\bar{x}, \lambda, v) \geq g(\lambda, v). \tag{2.13}$$

As a result, if the optimal cost function value for the problem in (2.1) is denoted as $p^*$, then $p^* \geq g(\lambda, v)$. In other words, $g(\lambda, v)$ constitutes a lower bound for the optimal value of the original problem for all $v \in \mathbb{R}^p$ and $\lambda \geq 0$. Then the best lower bound for $p^*$ can be computed using the following convex optimization problem

$$\begin{array}{ll} \underset{\lambda, v}{\text{maximize}} & g(\lambda, v) \\ \text{subject to} & \lambda \geq 0. \end{array} \tag{2.14}$$

This problem is the corresponding *dual* problem for the original problem in (2.1). The original problem in (2.1) is also called the *primal* problem.

Depending on the optimization problem, the lower bound calculated using (2.14), can be arbitrary tight or off. However, under certain conditions, it can be guaranteed that this lower bound is equal to $p^*$. In this case, it is said that strong duality holds.

Guaranteeing strong duality for general nonconvex problems is not straight forward. However, if the primal problem is convex and strictly feasible, i.e., there exists a feasible solution for the primal problem such that all inequality constraints hold strictly, strong duality holds. This set of conditions are called *Slater's constraint qualification*, [Boyd and Vandenberghe, 2004]. Note that if strong duality

holds, then the optimal solution for the primal problem can be obtained by solving the dual problem, [Boyd and Vandenberghe, 2004, Bertsekas, 2009].

## 2.4 Decomposition Methods

There are many cases when solving an optimization problem in a distributed or decentralized manner can improve the performance of the optimization procedure. For instance this is the case when the structure or scale of the problem is such that the problem cannot be solved in its original form.

Decomposition methods provide the possibility to divide the original optimization problem into several subproblems. Note that the gain from decomposing the original problem depends on the generated subproblems and how computationally demanding they are to solve in comparison to the original problem.

There are different decomposition methods described in the literature, e.g., primal, dual, proximal, etc, see [Bertsekas and Tsitsiklis, 1997, Conejo et al., 2006, Boyd et al., 2011]. In this section, we will only investigate the dual and primal decomposition methods which are similar to the approach taken in [Khoshfetrat Pakazad et al., 2011].

Consider the following optimization problem

$$\begin{aligned} \underset{x_i,\ i=1,\dots,N,\ y}{\text{minimize}} \quad & \sum_{i=1}^{N} f_i\left(x_i\right) \\ \text{subject to} \quad & x_i \in \mathcal{C}_i, \quad i = 1,\dots,N, \\ & x_i = E_i y, \quad i = 1,\dots,N, \end{aligned} \tag{2.15}$$

where $\mathcal{C}_i$s are convex sets that can be described by inequalities and equalities with $K$-convex and affine functions, respectively. Also, $y \in \mathbb{R}^m$, $x_i \in \mathbb{R}^{n_i}$ and $E_i \in \mathbb{R}^{n_i \times m}$, for $i = 1,\dots,N$. In this formulation, the variable $y$ and the constraints $x_i = E_i y$ are referred to as the consistency variables and constraints, respectively. These are used for describing the couplings between different components in vectors $x_i$, for $i = 1,\dots,N$. Consistency constraints provide the possibility to decompose the optimization problem into $N$ subproblems. Next, we discuss how the problem in (2.15) can be decomposed and solved, using its primal and dual formulations.

### 2.4.1 Primal decomposition

Primal decomposition methods make use of the primal formulation of the problem. Consider the problem in (2.15). If we let the consistency variables to be fixed, this problem breaks down to solving the following $N$ subproblems

$$\begin{aligned} \underset{x_i}{\text{minimize}} \quad & f_i(x_i) \\ \text{subject to} \quad & x_i \in \mathcal{C}_i, \\ & x_i = E_i y, \end{aligned} \tag{2.16}$$

for $i = 1, \ldots, N$. Let $x_i^*(y)$ and $g_i(y)$ denote the optimal solution and optimal value for these problems as a function of the consistency variables. Then, the consistency variables could be updated by solving the following optimization problem

$$\underset{y}{\text{minimize}} \quad \sum_{i=1}^{N} g_i(y). \tag{2.17}$$

Note that depending on the problems in (2.15) and (2.17), this minimization can be performed using different methods, e.g., gradient or subgradient descent methods, [Bertsekas and Tsitsiklis, 1997, Bertsekas, 1999, Conejo et al., 2006, Nedic et al., 2010]. In such algorithms, it is neither necessary to solve the problem in (2.17) exactly, nor is it required to calculate the optimal values and solutions of the problems in (2.16) explicitly as a function of consistency variables.

Having calculated the new updates for the consistency variables, the optimization problems in (2.16) are solved using the new updates. By repeating this procedure convergence to the optimal solution may be achieved.

### 2.4.2 Dual decomposition

As was mentioned in Section 2.3, if strong duality holds it is possible to obtain the optimal solution for the primal problem by solving the dual problem. Dual decomposition methods approach the problem through its dual formulation and decompose the minimization and maximization procedures in (2.12) and (2.14). Consider the partial Lagrangian for the problem in (2.15), i.e., the Lagrangian for the problem in (2.15) excluding the constraints $x_i \in \mathcal{C}_i$,

$$L(x, y, \lambda) = \sum_{i=1}^{N} f_i(x_i) + \sum_{i=1}^{N} \lambda_i' (x_i - E_i y). \tag{2.18}$$

where $\lambda_i \in \mathbb{R}^{n_i}$ and $\lambda = \begin{bmatrix} \lambda_1 & \cdots & \lambda_N \end{bmatrix}'$.

In order to calculate the dual function, we should minimize the Lagrangian with respect to the variables $x_i$, for $i = 1, \ldots, N$, and $y$. However, for the Lagrangian to be bounded from below, it is required that $E_i' \lambda_i = 0$ for all $i = 1, \ldots, N$. By this, minimizing the Lagrangian can be written as follows

$$
\begin{aligned}
d(\lambda) &= \underset{x_i \in \mathcal{C}_i,\ i=1,\ldots,N}{\text{minimize}} \sum_{i=1}^{N} \left\{ f_i\left(x_i\right) + \lambda_i' x_i \right\} \\
&= \sum_{i=1}^{N} \left\{ \underset{x_i \in \mathcal{C}_i}{\text{minimize}}\ f_i\left(x_i\right) + \lambda_i' x_i \right\}.
\end{aligned}
\tag{2.19}
$$

As can be seen from (2.19), this problem can be solved by solving the following $N$ subproblems,

$$
d_i(\lambda_i) := \underset{x_i \in \mathcal{C}_i}{\text{minimize}}\ f_i\left(x_i\right) + \lambda_i' x_i, \tag{2.20}
$$

for $i = 1, \ldots, N$. Let $x_i^*(\lambda_i)$ denote the optimal solutions for the problems in (2.19) for fixed values of $\lambda_i$. By (2.14), let the dual variables be updated using the following optimization problem

$$
\begin{aligned}
\underset{\lambda}{\text{maximize}} \quad & \sum_{i=1}^{N} d_i(\lambda_i) \\
\text{subject to} \quad & E_i' \lambda_i = 0, \quad i = 1, \ldots, N.
\end{aligned}
\tag{2.21}
$$

Then, under certain conditions, e.g, strict convexity of the functions $f_i$, it is possible to generate the primal and dual optimal solutions by solving the problems in (2.20) and (2.21) iteratively, until convergence is reached.

Note that similar to the primal decomposition method, the updates for the dual variables can also be obtained using different methods, such as gradient or subgradient descent methods, [[Bertsekas and Tsitsiklis, 1997, Boyd et al., 2011, Conejo et al., 2006, Nedic and Ozdaglar, 2001], and it is not necessary to solve the problem in (2.21) exactly.

## 2.5 Matrix Sparsity

A matrix is sparse if the number of nonzero elements in the matrix is considerably smaller than the number of zero elements. A sparsity pattern of a matrix describes where the nonzero elements are located in the matrix. Let $A \in \mathbb{C}^{n \times n}$ be a sparse matrix, then the sparsity pattern of this matrix can be described using the following set

$$
S = \left\{ (i, j) \mid A_{ij} \neq 0 \right\}, \tag{2.22}
$$

where $A_{ij}$ denotes the element on the $i^{\text{th}}$ row and $j^{\text{th}}$ column. This set is also referred to as the aggregate sparsity pattern. Considering the fact that in the applications in this thesis we mainly deal with symmetric matrices, from now on we only study the sparsity pattern for symmetric matrices. Note that if the matrix is symmetric and $(i, j) \in S$ then $(j, i) \in S$.

The sparsity pattern for a sparse symmetric matrix can also be described through the associated undirected graph for the matrix. Let $G(V, E)$ denote an undirected graph with vertex or node set $V$ and edge set $E$. Then the associated graph for the matrix $A$ is a graph with $V = \{1, \cdots, n\}$ and edges between nodes $i, j \in V \times V$, if $A_{i,j} \neq 0$ and $i \neq j$. Note that by this, the associated graph does not include any self-loops and does not represent any of the diagonal entries of the matrix.

Often special structures of the associated graph point to properties in the matrix that can be exploited in different applications. One of the important structures for graphs, specifically in this thesis, is the chordal structure and it is defined as follows.

**Definition 2.6 (Chordal Graphs, Fukuda et al. [2000]).** A graph $G(V, E)$ is *chordal* if every cycle of length $\geq 4$ has a chord, i.e., an edge between two non-consecutive nodes in the cycle.

If the associated graph for an sparse matrix is chordal, it is said that the matrix has a chordal sparsity pattern. Often exploiting chordal sparsity in matrices used in the description of optimization problems, enables us to solve such problems more efficiently.

### 2.5.1 Possibilities in sparsity in semidefinite programming

The aim of exploiting sparsity in optimization problems is to reduce the computational burden of solving the problem. This can be achieved by either reducing the dimension of the optimization problem or by decomposing the problem into smaller and easier problems to solve.

Exploitation of chordal sparsity has been studied in SDP problems with promising results, see [Fukuda et al., 2000], [Kim et al., 2010, Klerk, 2010]. In order to discuss the opportunities provided by exploiting chordal sparsity in the problem, we need to introduce some basic concepts and notations.

Let $X$ be an $n \times n$ symmetric matrix variable, and let $V = \{1, \ldots, n\}$ denote the set of its row and column indices. Assume that entries of $X$ specified by the enteries in the set $F \subset V \times V$ are fixed.

**Definition 2.7 (Positive semidefinite completion, Fukuda et al. [2000]).** It is said that the symmetric $n \times n$ matrix $\bar{X}$ is a symmetric *positive (semi) definite completion* for $X$, if for all $(i, j) \in F$, $\bar{X}_{ij} = X_{ij}$ and $\bar{X} \succ 0$ ($\bar{X} \succeq 0$).

**Definition 2.8 (Complete graphs, Fukuda et al. [2000]).** A graph is said to be *complete* is there exists an edge between its every two nodes.

**Definition 2.9 (Cliques and maximal cliques, Kim et al. [2010]).** A *clique* of a graph $G(V, E)$ is any subgraph with vertices $C \subset V$ that is complete, and if its vertex set is not a proper subset of a vertex set of another clique, it is also a *maximal* clique.

Let $\bar{V} \subset V$, and let $X_{\bar{V}}$ denote a submatrix of $X$ with entries specified in $\bar{V} \times \bar{V}$. As an example consider the following $3 \times 3$ matrix and its submatrix specified by $\bar{V} = \{1, 3\}$,

$$X = \begin{bmatrix} 1 & 2 & 3 \\ 2 & 5 & 6 \\ 3 & 6 & 9 \end{bmatrix}, \quad X_{\bar{V}} = \begin{bmatrix} 1 & 3 \\ 3 & 9 \end{bmatrix}. \tag{2.23}$$

Using the definitions and notations introduced above, the following theorem provides the main result of this section.

**Theorem 2.1 (Fukuda et al. [2000]).** *Let the entries of $X$ belonging to $F$ be fixed and specified, and let $G(V, E)$ be its associated graph, such that , $F = E \cup \{(i, i) | i \in V\}$. Also assume that $G(V, E)$ is chordal with $l$ maximal cliques with vertex sets $C_k \subset V$ for $k = 1, \ldots, l$. Then the matrix $X$ has a symmetric positive (semi) definite completion if and only if ($X_{C_k} \succeq 0$) $X_{C_k} \succ 0$ for all $k = 1, \ldots, l$.*

As can be seen, this theorem provides a preliminary guideline on how to decompose large SDP problems with chordal sparsity, into smaller and easier problems to solve. However, the new set of semidefinite constraints does not constitute a standard SDP problem. This is due to the fact that if there exist $m, p \in \{1, \ldots, l\}$ such that $C_m \bigcap C_p \neq \emptyset$, there are common variables among the constraints $X_{C_m} \succeq 0$ and $X_{C_p} \succeq 0$, introduced in Theorem 2.1. The presence of such common variables is addressed by introducing auxiliary variables.

As an example, consider the simple constraint $X \in \mathbb{S}^n$, $X \succeq 0$ with the aggregate sparsity pattern $F = \{(i, j) \,|\, |i - j| \leq 1\}$. The associated graph for this constraint, as defined in Theorem 2.1, is chordal. The maximal cliques for this chordal graph are $C_k = \{k, k + 1\}$ for $k = 1, \ldots, n - 2$. As a result, using Theorem 2.1, $X \succeq 0$ is equivalent to the following set of constraints

$$\begin{aligned} &\begin{bmatrix} X_{11} & X_{12} \\ X_{21} & Z_1 \end{bmatrix} \succeq 0, \\ &\begin{bmatrix} Y_{k-1} & X_{kk+1} \\ X_{kk+1} & Z_k \end{bmatrix} \succeq 0, \quad \text{for } k = 2, \ldots, n-2 \\ &\begin{bmatrix} Y_{n-2} & X_{kk+1} \\ X_{kk+1} & X_{nn} \end{bmatrix} \succeq 0, \\ &Z_k - Y_k = 0, \quad \text{for } k = 1, \ldots, n-2, \end{aligned} \tag{2.24}$$

where the equality constraints and the auxiliary variables $Z_k$ and $Y_k$, for $k = 1, \ldots, n - 2$, are introduced to rectify the issue with the common variables. Note that depending on how chordal sparsity is observed in the problem, there are different approaches on how to decompose and reduce the dimension of the original problem, e.g., see [Kim et al., 2010].

# 3

# Uncertain Systems and Robustness Analysis

This chapter touches upon some of the basic concepts in robustness analysis of uncertain systems. In Section 3.1, a description of linear systems is reviewed. Section 3.2 extends this description to linear uncertain systems. Lastly, in Section 3.3 we briefly review a method for analyzing robust stability and performance of uncertain systems with structured uncertainties. Note that this chapter follows the ideas from [Zhou et al., 1997] and it is recommended to consult this reference for more details on the discussed topics.

## 3.1 Linear Systems

In this thesis the main focus is robustness analysis of linear systems and this section reviews some of the basics of linear systems.

### 3.1.1 Continuous time systems

Consider the following description of a linear time invariant system

$$\begin{aligned} \dot{x}(t) &= Ax(t) + Bu(t), \\ y(t) &= Cx(t) + Du(t), \end{aligned} \tag{3.1}$$

where $x \in \mathbb{R}^n$, $A \in \mathbb{R}^{n\times n}$, $B \in \mathbb{R}^{n\times m}$, $C \in \mathbb{R}^{p\times n}$ and $D \in \mathbb{R}^{p\times m}$. This is referred to as the state space representation for the system. The corresponding transfer function matrix for this system is defined as $G(s) = C\,(sI - A)^{-1}\,B + D$, with $s \in \mathbb{C}$, and is also denoted as follows

$$G(s) := \left[\begin{array}{c|c} A & B \\ \hline C & D \end{array}\right]. \tag{3.2}$$

This system is said to be stable, if for all the eigenvalues, $\lambda_i$, of the matrix $A$ we have that $\operatorname{Re}\lambda_i < 0$. Given an initial state, $x(t_0)$ and input $u(t)$, the system responses for $x(t)$ and $y(t)$ are given by

$$\begin{aligned} x(t) &= e^{A(t-t_0)}x(t_0) + \int_{t_0}^{t} e^{A(t-\tau)}Bu(\tau)\,\mathrm{d}\tau, \\ y(t) &= Cx(t) + Du(t). \end{aligned} \tag{3.3}$$

### 3.1.2 $\mathcal{H}_\infty$ and $\mathcal{H}_2$ norms

The $\mathcal{H}_2$ norm for the system described in (3.1), is defined as follows

$$\|G\|_2^2 = \frac{1}{2\pi}\int_{-\infty}^{\infty} \operatorname{Tr}\left\{G(j\omega)^* G(j\omega)\right\}\mathrm{d}\omega. \tag{3.4}$$

Considering this definition, for a system to have finite $\mathcal{H}_2$ norm it is required that $D = 0$. In that case and if the system is stable, the $\mathcal{H}_2$ norm of the system can be calculated as follows

$$\|G\|_2^2 = \operatorname{Tr}\left\{B'QB\right\} = \operatorname{Tr}\left\{CPC'\right\}, \tag{3.5}$$

where $P$ and $Q$ are the controllability and observability Grammians, respectively. These are the unique solutions to the following Lyapunov equations,

$$\begin{aligned} AP + PA' + BB' &= 0, \\ AQ' + QA + C'C &= 0. \end{aligned} \tag{3.6}$$

In case the system in (3.1) is stable, the $\mathcal{H}_\infty$ norm for the system is defined as below

$$\|G\|_\infty = \sup_\omega \bar{\sigma}\left\{G(j\omega)\right\}, \tag{3.7}$$

where $\bar{\sigma}$ denotes the maximum singular value for a matrix.

In this thesis, methods for computing the $\mathcal{H}_\infty$ norm are not discussed and we just state that this quantity can be computed by solving a Semi Definite Programming problem, [Boyd et al., 1994], or by iterative algorithms using bisection, [Boyd et al., 1988, Zhou et al., 1997].

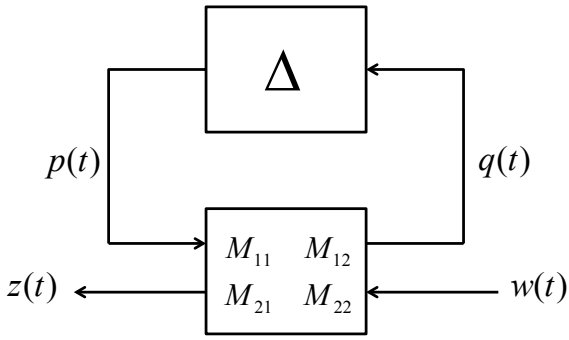


***Figure 3.1:*** *Uncertain system with structured uncertainty*

## 3.2 Uncertain Systems

There are different methods to express uncertainty in a system. These descriptions fall mainly into the two categories of structured and unstructured uncertainties. In this section, we only discuss structured uncertainties.

### 3.2.1 Structured uncertainties and LFT representation

In case of a bounded uncertainty and rational system uncertainty dependence, it is possible to describe the uncertain system as a feedback connection of the uncertainty and a time invariant system, as illustrated in Figure 3.1, where $\Delta$ is the extracted uncertainties from the system and the transfer function matrix $M = \begin{bmatrix} M_{11} & M_{12} \\ M_{21} & M_{22} \end{bmatrix}$ is the coefficient or system matrix. Let $M \in \mathbb{C}^{(d+l)\times(d+m)}$, $M_{11} \in \mathbb{C}^{d\times d}$, $M_{12} \in \mathbb{C}^{d\times m}$, $M_{21} \in \mathbb{C}^{l\times d}$ and $M_{22} \in \mathbb{C}^{l\times m}$. The coefficient or system matrix can always be constructed such that $\Delta$ has the following block diagonal structure

$$\Delta = \operatorname{diag}\begin{bmatrix} \delta_1 I_{r_1} & \cdots & \delta_L I_{r_L} & \Delta_{L+1} & \cdots & \Delta_{L+F} \end{bmatrix}, \tag{3.8}$$

where $\delta_i \in \mathbb{C}$ for $i = 1, \cdots, L$, $\Delta_{L+j} \in \mathbb{C}^{m_j \times m_j}$ for $j = 1, \cdots, F$ and $\sum_{i=1}^{L} r_i + \sum_{j=1}^{F} m_j = d$, and all blocks have a bounded induced $\infty$-norm less than or equal to 1, i.e., $|\delta_i| \leq 1$, for $i = 1, \ldots, L$, and $\|\Delta_i\|_\infty \leq 1$, for $i = L, \ldots, L+F$. Systems with an uncertainty structure as in (3.8) are referred to as uncertain systems with structured uncertainties.

The representation of the uncertain system in Figure 3.1 is also referred to as the Linear Fractional Transformation, LFT, representation of the system, [Magni, 2006, Hecker et al., 2005]. Using this representation it is possible to describe the mapping between $w(t)$ and $z(t)$ as below

$$(\Delta * M) := M_{22} + M_{21}\Delta(I - M_{11}\Delta)^{-1}M_{12}, \tag{3.9}$$

where this transfer function matrix is referred to as the upper LFT with respect to $\Delta$. This type of representation of uncertain systems is used extensively in the upcoming papers and sections.

### 3.2.2 Robust $\mathcal{H}_\infty$ and $\mathcal{H}_2$ norms

Robust $\mathcal{H}_2$ and $\mathcal{H}_\infty$ norms for uncertain systems with structured uncertainties are defined as

$$\sup_{\Delta \in B_\Delta} \|\Delta * M\|_2^2 = \sup_{\Delta \in B_\Delta} \int_{-\infty}^{\infty} \mathrm{Tr}\left\{(\Delta * M)^*(\Delta * M)\right\} \frac{d\omega}{2\pi}, \tag{3.10}$$

$$\sup_{\Delta \in B_\Delta} \|\Delta * M\|_\infty = \sup_{\Delta \in B_\Delta} \sup_{\omega} \bar{\sigma}\left\{(\Delta * M)\right\}, \tag{3.11}$$

respectively, where $B_\Delta$ represents the unit ball for the induced $\infty$-norm for the uncertainty structure in (3.8).

These quantities are of great importance and in case $w(t)$ and $z(t)$ are viewed as disturbance acting on the system and controlled output of the system, respectively, these norms quantify the worst case effect of the disturbance on the performance of the system. The computation of these quantities are not discussed in this section and for more information on the calculation of upper bounds for these norms refer to [Paganini and Feron, 2000, Paganini, 1997, 1999, Doyle et al., 1989, Zhou et al., 1997].

### 3.2.3 Nominal and robust stability and performance

Consider the interconnection of a controller with an uncertain system with structured uncertainty as in Figure 3.2, where $K$ is the controller and $\Delta$ represents the uncertainty in the model. Considering the fact that in this section we do not discuss the synthesis problem, we assume that a controller is designed such that the nominal system, with $\Delta = 0$, together with the controller is stable and satisfies certain requirements over the performance of the closed loop system. Then the system is called *nominally* stable and has a nominal performance.

Under this assumption, if the process, $P$, and the controller are combined, then the setup in Figure 3.2 will transform to the one presented in Figure 3.1. In this case, if the resulting system together with the uncertainty is stable and satisfies the nominal requirements on its behavior, it is said that the system is *robustly* stable and has robust performance.

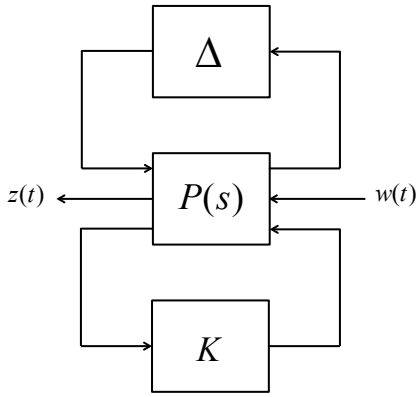


***Figure 3.2:*** *Uncertain system with a structured uncertainty and a controller*

## 3.3 $\mu$-Analysis

As was mentioned in Chapter 1, it is important to evaluate the robustness of the proposed controllers with respect to the uncertainty in the model, specifically if the controller is designed using model based design methods that do not take the uncertainty into account explicitely. This type of analysis should examine the possibility of loss of stability or performance when considering uncertainty in the model. In the upcoming subsections, a framework for analyzing robust stability and performance of uncertain systems with structured uncertainty is reviewed.

### 3.3.1 Structured singular values

Consider the system in Figure 3.1. As was mentioned in Section 3.2.1, the transfer function matrix between $w(t)$ and $z(t)$ can be described using the upper LFT with respect to $\Delta$, as in (3.9). For this relation to exist, it is required that $\det(I - M_{11}\Delta) \neq 0$ for all frequencies and $\Delta \in B_\Delta$. This motivates the definition of the structured singular values for matrices.

**Definition 3.1 (Structured Singular Values, Zhou et al. [1997]).** Let $G \in \mathbb{C}^{n\times n}$ and $\Delta \in B_\Delta$. Then the *structured singular value* for $G$ is defined as

$$\mu_\Delta(G) := \frac{1}{\min\{\bar{\sigma}(\Delta) \mid \Delta \in B_\Delta,\ \det(I - G\Delta) = 0\}}, \tag{3.12}$$

and if there does not exist any $\Delta \in B_\Delta$ such that $\det(I - G\Delta) = 0$, then $\mu_\Delta(G) := 0$.

From Definition 3.1, it can be seen that $\mu_\Delta(G)$ quantifies the smallest perturbation, from the $\bar{\sigma}(\Delta)$ perspective, that causes $\det(I - G\Delta)$ to become zero. However, generally it is not possible to compute the exact value for the structured singular value and instead upper bounds for this quantity are used. From the definition of $\mu_\Delta(G)$, it follows that $\mu_\Delta(G) \leq \bar{\sigma}(G)$, [Zhou et al., 1997]. Let $\mathbf{X} = \{X \mid X \succ 0,\ X = X^*,\ \ X\Delta = \Delta X\}$. Considering the fact that $\mu_\Delta(G) = \mu_\Delta\left(XGX^{-1}\right)$

for all $X \in \mathbf{X}$, it holds that

$$\mu_\Delta(G) \leq \bar{\sigma}\left(XGX^{-1}\right), \quad \forall X \in \mathbf{X}. \tag{3.13}$$

As a result this upper bound can be tightened by minimizing the right hand side of the inequality in (3.13) with respect to the scaling $X$. Hence, a tightened upper bound is given by

$$\inf_{X \in \mathbf{X}} \bar{\sigma}\left(XGX^{-1}\right). \tag{3.14}$$

The structured singular value and the upper bound in (3.14), play an important role in structured robust stability and performance analysis, and this is discussed in the following section.

### 3.3.2 Structured robust stability and performance analysis

Consider the system in Figure 3.1. The following theorem provides a tool for robust stability analysis of uncertain systems with structured uncertainty.

**Theorem 3.1 (Zhou et al. [1997]).** *Let $\Delta \in B_\Delta$. Then the system in Figure 3.1 is robustly stable* ***if and only if***

$$\sup_\omega \mu_\Delta(M_{11}(j\omega)) < 1. \tag{3.15}$$

**Proof:** See [Zhou et al., 1997]. □

This theorem can be modified using the upper bound in (3.14) as follows.

**Corollary 3.1.** *Let $\Delta \in B_\Delta$ and $X(\omega) \in \mathbf{X}$ $\forall \omega$. Then the system in Figure 3.1 is robustly stable* ***if*** *for all $\omega$*

$$\inf_{X(\omega) \in \mathbf{X}} \bar{\sigma}\left(X(\omega)M_{11}(j\omega)X(\omega)^{-1}\right) < 1. \tag{3.16}$$

**Proof:** It follows from Theorem 3.1 and the upper bound for the structured singular value in (3.14). □

For each frequency, $\omega_0$, the condition in (3.16) can be examined using the following convex feasibility problem

$$\begin{aligned} &\text{find} && X \\ &\text{subject to} && X \in \mathbf{X}, \\ & && M_{11}(j\omega_0)^* X M_{11}(j\omega_0) - X \prec 0, \end{aligned} \tag{3.17}$$

which is an SDP problem. Considering the fact that the problem in (3.17) should be solved for infinitely many frequencies, the whole problem constitutes an infinite dimensional problem. As a result, in practice the robust stability analysis is often performed only over a grid of sufficiently many frequency points.

The robust performance analysis for the system can also be addressed in a similar way by introducing an augmented uncertainty block. Recall the system matrix defined in Section 3.2.1, see Figure 3.1. Define the augmented uncertainty block

$$\Delta_A = \begin{bmatrix} \Delta & 0 \\ 0 & \Delta_p \end{bmatrix}, \tag{3.18}$$

where $\Delta_p \in \mathbb{C}^{m \times l}$ with $\|\Delta_p\| \leq 1$ and $\Delta \in B_\Delta \subset \mathbb{C}^{d \times d}$. Then by replacing $\Delta$ with $\Delta_A$ and $M_{11}$ with $M$ in Theorem 3.1 and Corollary 3.1, the robust performance of the system can be analyzed in the same manner as for the robust stability analysis. For more detailed discussions on this topic, the reader is referred to [Zhou et al., 1997].

# Bibliography


B. W. Bequette. *Process control - Modeling, design and simulation*. Pearson Education, 2003.

D. P. Bertsekas. *Nonlinear programming*. Athena Scientific, 1999.

D. P. Bertsekas. *Convex optimization theory*. Athena Scientific, 2009.

D. P. Bertsekas and J. N. Tsitsiklis. *Parallel and Distributed Computation: Numerical Methods*. Athena Scientific, 1997.

S. Boyd and L. Vandenberghe. *Convex optimization*. Cambridge University Press, 2004.

S. Boyd, V. Balakrishnan, and P. Kabamba. On computing the $\mathcal{H}_\infty$ norm of a transfer matrix. *Proceedings of the American Control Conference*, 1988.

S. Boyd, L. ElGhaoui, E. Feron, and V. Balakrishnan. *Linear matrix inequalities in system and control theory*. Society for Industrial and Applied Mathematics, 1994.

S. Boyd, N. Parikh, E. Chu, B. Peleato, and J. Eckstein. Distributed optimization and statistical learning via the alternating direction method of multipliers. *Foundations and Trends in Machine Learning*, 3(1):1–122, 2011.

K. Budka, J. Deshpande, J. Hobby, Young-Jin Kim, V. Kolesnikov, Wonsuck Lee, T. Reddington, M. Thottan, C.A. White, Jung-In Choi, Junhee Hong, Jinho Kim, Wonsuk Ko, Young-Woo Nam, and Sung-Yong Sohn. GERI - Bell Labs smart grid research focus: Economic modeling, networking, and security amp; privacy. In *First IEEE International Conference on Smart Grid Communications (SmartGridComm)*, pages 208 –213, Oct. 2010.

A. J. Conejo, E. Castillo, R. Miguez, and R. Garcia-Bertrand. *Decomposition techniques in mathematical programming*. Springer, 2006.

J.C. Doyle, K. Glover, P.P. Khargonekar, and B.A. Francis. State-space solutions to standard $\mathcal{H}_2$ and $\mathcal{H}_\infty$; control problems. *IEEE Transactions on Automatic Control*, 34(8):831 –847, Aug. 1989.

M. Fukuda, M. Kojima, M. Kojima, K. Murota, and K. Nakata. Exploiting sparsity in semidefinite programming via matrix completion I: General framework. *SIAM Journal on Optimization*, 11:647–674, 2000.

A. Garulli, A. Hansson, S. Khoshfetrat Pakazad, A. Masi, and R. Wallin. Robust finite-frequency $\mathcal{H}_2$ analysis of uncertain systems. Technical Report LiTH-ISY-R-3011, Department of Electrical Engineering, Linköping University, SE-581 83 Linköping, Sweden, May 2011.

T. Glad and L. Ljung. *Control theory, multivariable and nonlinear methods*. CRC Press, 2000.

S. Hecker, A. Varga, and J. Magni. Enhanced LFR-toolbox for Matlab. *Aerospace Science and Technology*, 9(2):173 – 180, 2005.

S. Khoshfetrat Pakazad, A. Hansson, M. S. Andersen, and A. Rantzer. Decomposition and projection methods for distributed robustness analysis of interconnected uncertain systems. Technical Report LiTH-ISY-R-3033, Department of Electrical Engineering, Linköping University, SE-581 83 Linköping, Sweden, Nov. 2011.

S. Kim, M. Kojima, M. Mevissen, and M. Yamashita. Exploiting sparsity in linear and nonlinear matrix inequalities via positive semidefinite matrix completion. *Mathematical Programming*, pages 1–36, 2010.

E. Klerk. Exploiting special structure in semidefinite programming: A survey of theory and applications. *European Journal of Operational Research*, 201(1):1 – 10, 2010.

M. Krstic. Control of an unstable reaction-diffusion PDE with long input delay. In *Proceedings of the IEEE Conference on Decision and Control*, pages 4452–4457, 2009.

J. Magni. User Manual of the Linear Fractional Representation Toolbox Version 2.0. Technical report, ONERA, Systems Control and Flight Dynamics Department, Feb. 2006.

A. Masi, R. Wallin, A. Garulli, and A. Hansson. Robust finite-frequency $\mathcal{H}_2$ analysis. *Proceedings of 49th IEEE Conference on Decision and Control*. 2010.

A. Mbarushimana and A. Xin. Load management using smart supervisory in a distributed smart grid. In *4th International Conference on Electric Utility Deregulation and Restructuring and Power Technologies DRPT*, pages 1113 – 1120, July 2011.

A. Nedic and A. Ozdaglar. *Convex Optimization in Signal Processing and Communications, Ch. Cooperative distributed multi-agent optimization*. Cambridge University Press, 2001.

A. Nedic, A. Ozdaglar, and P.A. Parrilo. Constrained consensus and optimization in multi-agent networks. *IEEE Transactions on Automatic Control*, 55(4):922 –938, April 2010.

F. Paganini. State space conditions for robust $\mathcal{H}_2$ analysis. *Proceedings of the American Control Conference*, 2:1230 –1234 vol.2, Jun. 1997.

F. Paganini. Convex methods for robust $\mathcal{H}_2$ analysis of continuous-time systems. *IEEE Transactions on Automatic Control*, pages 239 –252, Feb. 1999.

F. Paganini and E. Feron. *Advances in linear matrix inequality methods in control, Ch. Linear matrix inequality methods for robust $\mathcal{H}_2$ analysis: A survey with comparisons.* Society for Industrial and Applied Mathematics, 2000.

S. Khoshfetrat Pakazad, A. Hansson, and A. Garulli. On the calculation of the robust finite frequency $\mathcal{H}_2$ norm. *Proceedings of the 18th IFAC World Congress.* 2011.

A. Papachristodoulou and M.M. Peet. On the analysis of systems described by classes of partial differential equations. In *45th IEEE Conference on Decision and Control*, pages 747 –752, Dec. 2006.

S. Skogestad and I. Postlethwaite. *Multivariable feedback control.* Wiley, 2007.

K. J. Åström and T. Hägglund. *PID controllers - Theory, design, and tuning.* Instrument Society of America, 1995.

K. J. Åström and B. Wittenmark. *Computer controlled systems - Theory and design.* Prentice Hall, 1990.

R. Wallin, S. Khoshfetrat Pakazad, A. Hansson, A. Garulli, and A. Masi. *Optimization Based Clearance of Flight Control Laws , Ch. Applications of IQC based analysis techniques for clearance.* Springer, 2011.

K. Zhou and J. C. Doyle. *Essentials of robust control.* Prentice Hall, 1998.

K. Zhou, J. C. Doyle, and K. Glover. *Robust and optimal control.* Prentice Hall, 1997.

X. Zhou, L. Cui, and Y. Ma. Research on smart grid technology. In *International Conference on Computer Application and System Modeling (ICCASM)*, volume 3, pages V3–599 –V3–603, Oct. 2010.

**Licentiate Theses**
**Division of Automatic Control**
**Linköping University**

**P. Andersson:** Adaptive Forgetting through Multiple Models and Adaptive Control of Car Dynamics. Thesis No. 15, 1983.

**B. Wahlberg:** On Model Simplification in System Identification. Thesis No. 47, 1985.

**A. Isaksson:** Identification of Time Varying Systems and Applications of System Identification to Signal Processing. Thesis No. 75, 1986.

**G. Malmberg:** A Study of Adaptive Control Missiles. Thesis No. 76, 1986.

**S. Gunnarsson:** On the Mean Square Error of Transfer Function Estimates with Applications to Control. Thesis No. 90, 1986.

**M. Viberg:** On the Adaptive Array Problem. Thesis No. 117, 1987.

**K. Ståhl:** On the Frequency Domain Analysis of Nonlinear Systems. Thesis No. 137, 1988.

**A. Skeppstedt:** Construction of Composite Models from Large Data-Sets. Thesis No. 149, 1988.

**P. A. J. Nagy:** MaMiS: A Programming Environment for Numeric/Symbolic Data Processing. Thesis No. 153, 1988.

**K. Forsman:** Applications of Constructive Algebra to Control Problems. Thesis No. 231, 1990.

**I. Klein:** Planning for a Class of Sequential Control Problems. Thesis No. 234, 1990.

**F. Gustafsson:** Optimal Segmentation of Linear Regression Parameters. Thesis No. 246, 1990.

**H. Hjalmarsson:** On Estimation of Model Quality in System Identification. Thesis No. 251, 1990.

**S. Andersson:** Sensor Array Processing; Application to Mobile Communication Systems and Dimension Reduction. Thesis No. 255, 1990.

**K. Wang Chen:** Observability and Invertibility of Nonlinear Systems: A Differential Algebraic Approach. Thesis No. 282, 1991.

**J. Sjöberg:** Regularization Issues in Neural Network Models of Dynamical Systems. Thesis No. 366, 1993.

**P. Pucar:** Segmentation of Laser Range Radar Images Using Hidden Markov Field Models. Thesis No. 403, 1993.

**H. Fortell:** Volterra and Algebraic Approaches to the Zero Dynamics. Thesis No. 438, 1994.

**T. McKelvey:** On State-Space Models in System Identification. Thesis No. 447, 1994.

**T. Andersson:** Concepts and Algorithms for Non-Linear System Identifiability. Thesis No. 448, 1994.

**P. Lindskog:** Algorithms and Tools for System Identification Using Prior Knowledge. Thesis No. 456, 1994.

**J. Plantin:** Algebraic Methods for Verification and Control of Discrete Event Dynamic Systems. Thesis No. 501, 1995.

**J. Gunnarsson:** On Modeling of Discrete Event Dynamic Systems, Using Symbolic Algebraic Methods. Thesis No. 502, 1995.

**A. Ericsson:** Fast Power Control to Counteract Rayleigh Fading in Cellular Radio Systems. Thesis No. 527, 1995.

**M. Jirstrand:** Algebraic Methods for Modeling and Design in Control. Thesis No. 540, 1996.

**K. Edström:** Simulation of Mode Switching Systems Using Switched Bond Graphs. Thesis No. 586, 1996.

**J. Palmqvist:** On Integrity Monitoring of Integrated Navigation Systems. Thesis No. 600, 1997.
**A. Stenman:** Just-in-Time Models with Applications to Dynamical Systems. Thesis No. 601, 1997.
**M. Andersson:** Experimental Design and Updating of Finite Element Models. Thesis No. 611, 1997.
**U. Forssell:** Properties and Usage of Closed-Loop Identification Methods. Thesis No. 641, 1997.
**M. Larsson:** On Modeling and Diagnosis of Discrete Event Dynamic systems. Thesis No. 648, 1997.
**N. Bergman:** Bayesian Inference in Terrain Navigation. Thesis No. 649, 1997.
**V. Einarsson:** On Verification of Switched Systems Using Abstractions. Thesis No. 705, 1998.
**J. Blom, F. Gunnarsson:** Power Control in Cellular Radio Systems. Thesis No. 706, 1998.
**P. Spångéus:** Hybrid Control using LP and LMI methods – Some Applications. Thesis No. 724, 1998.
**M. Norrlöf:** On Analysis and Implementation of Iterative Learning Control. Thesis No. 727, 1998.
**A. Hagenblad:** Aspects of the Identification of Wiener Models. Thesis No. 793, 1999.
**F. Tjärnström:** Quality Estimation of Approximate Models. Thesis No. 810, 2000.
**C. Carlsson:** Vehicle Size and Orientation Estimation Using Geometric Fitting. Thesis No. 840, 2000.
**J. Löfberg:** Linear Model Predictive Control: Stability and Robustness. Thesis No. 866, 2001.
**O. Härkegård:** Flight Control Design Using Backstepping. Thesis No. 875, 2001.
**J. Elbornsson:** Equalization of Distortion in A/D Converters. Thesis No. 883, 2001.
**J. Roll:** Robust Verification and Identification of Piecewise Affine Systems. Thesis No. 899, 2001.
**I. Lind:** Regressor Selection in System Identification using ANOVA. Thesis No. 921, 2001.
**R. Karlsson:** Simulation Based Methods for Target Tracking. Thesis No. 930, 2002.
**P.-J. Nordlund:** Sequential Monte Carlo Filters and Integrated Navigation. Thesis No. 945, 2002.
**M. Östring:** Identification, Diagnosis, and Control of a Flexible Robot Arm. Thesis No. 948, 2002.
**C. Olsson:** Active Engine Vibration Isolation using Feedback Control. Thesis No. 968, 2002.
**J. Jansson:** Tracking and Decision Making for Automotive Collision Avoidance. Thesis No. 965, 2002.
**N. Persson:** Event Based Sampling with Application to Spectral Estimation. Thesis No. 981, 2002.
**D. Lindgren:** Subspace Selection Techniques for Classification Problems. Thesis No. 995, 2002.
**E. Geijer Lundin:** Uplink Load in CDMA Cellular Systems. Thesis No. 1045, 2003.
**M. Enqvist:** Some Results on Linear Models of Nonlinear Systems. Thesis No. 1046, 2003.
**T. Schön:** On Computational Methods for Nonlinear Estimation. Thesis No. 1047, 2003.
**F. Gunnarsson:** On Modeling and Control of Network Queue Dynamics. Thesis No. 1048, 2003.
**S. Björklund:** A Survey and Comparison of Time-Delay Estimation Methods in Linear Systems. Thesis No. 1061, 2003.

**M. Gerdin:** Parameter Estimation in Linear Descriptor Systems. Thesis No. 1085, 2004.

**A. Eidehall:** An Automotive Lane Guidance System. Thesis No. 1122, 2004.

**E. Wernholt:** On Multivariable and Nonlinear Identification of Industrial Robots. Thesis No. 1131, 2004.

**J. Gillberg:** Methods for Frequency Domain Estimation of Continuous-Time Models. Thesis No. 1133, 2004.

**G. Hendeby:** Fundamental Estimation and Detection Limits in Linear Non-Gaussian Systems. Thesis No. 1199, 2005.

**D. Axehill:** Applications of Integer Quadratic Programming in Control and Communication. Thesis No. 1218, 2005.

**J. Sjöberg:** Some Results On Optimal Control for Nonlinear Descriptor Systems. Thesis No. 1227, 2006.

**D. Törnqvist:** Statistical Fault Detection with Applications to IMU Disturbances. Thesis No. 1258, 2006.

**H. Tidefelt:** Structural algorithms and perturbations in differential-algebraic equations. Thesis No. 1318, 2007.

**S. Moberg:** On Modeling and Control of Flexible Manipulators. Thesis No. 1336, 2007.

**J. Wallén:** On Kinematic Modelling and Iterative Learning Control of Industrial Robots. Thesis No. 1343, 2008.

**J. Harju Johansson:** A Structure Utilizing Inexact Primal-Dual Interior-Point Method for Analysis of Linear Differential Inclusions. Thesis No. 1367, 2008.

**J. D. Hol:** Pose Estimation and Calibration Algorithms for Vision and Inertial Sensors. Thesis No. 1370, 2008.

**H. Ohlsson:** Regression on Manifolds with Implications for System Identification. Thesis No. 1382, 2008.

**D. Ankelhed:** On low order controller synthesis using rational constraints. Thesis No. 1398, 2009.

**P. Skoglar:** Planning Methods for Aerial Exploration and Ground Target Tracking. Thesis No. 1420, 2009.

**C. Lundquist:** Automotive Sensor Fusion for Situation Awareness. Thesis No. 1422, 2009.

**C. Lyzell:** Initialization Methods for System Identification. Thesis No. 1426, 2009.

**R. Falkeborn:** Structure exploitation in semidefinite programming for control. Thesis No. 1430, 2010.

**D. Petersson:** Nonlinear Optimization Approaches to $\mathcal{H}_2$-Norm Based LPV Modelling and Control. Thesis No. 1453, 2010.

**Z. Sjanic:** Navigation and SAR Auto-focusing in a Sensor Fusion Framework. Thesis No. 1464, 2011.

**K. Granström:** Loop detection and extended target tracking using laser data. Thesis No. 1465, 2011.

**J. Callmer:** Topics in Localization and Mapping. Thesis No. 1489, 2011.

**F. Lindsten:** Rao-Blackwellised particle methods for inference and identification. Thesis No. 1480, 2011.

**M. Skoglund:** Visual Inertial Navigation and Calibration. Thesis No. 1500, 2011.